Comprehensive Strategic Energy Plan

Dayne Walling
Mayor

Vision of Flint as a Sustainable City

By:

Kate Fields

Advanced
SOLUTIONS GROUP, LLC
Energy Specialists

2804 N. Franklin Avenue, Flint, Michigan 48506-2847

Office (810) 233-7300 • Fax (810) 233-7322 • Toll Free 1-877-233-7305

www.asggreenenergy.com

info@asggreenenergy.com

TABLE OF CONTENTS

EXECUTIVE SUMMARY

The Energy Efficiency and Conservation Block Grant (EECBG) is a new funding opportunity for the City of Flint. Administered by the Department of Energy (DOE), these grants provide a formula allocation for entitlement communities. The City of Flint has been allocated $1,147,900 for activities which will assist the city in their efforts to conserve energy and increase efficiency in many areas related to energy use.

Award of these grant funds has been predicated upon the city's submission of a strategic plan, which is called the Energy Efficiency and Conservation Strategy (EECS). The DOE application consisted of a Part 1 and Part 2 application. The Part I application was for Two Hundred and Fifty Thousand dollars ($250,000) of the total grant to be used for Technical Assistance in preparing the EECS. The city contracted with Advanced Solutions Group LLC (ASG) to assist with development of the EECS. The Part 2 application was for the balance of the funding, or Eight Hundred Ninety-seven Thousand and Nine-hundred dollars ($897,900) which is to be utilized for the Projects and Activities identified in the DOE approved EECS.

DOE established fourteen eligible activity areas for this grant. Each of the fourteen areas are extensive and have the potential for many activities, programs and approaches to energy efficiency and conservation. The use of total grant funds is to be based on the priorities, strategies and activities developed and recommended in the EECS.

Currently, the City of Flint does not have any type of planned strategies, policies or programs in place that relate to conservation of energy. At the beginning of the EECS planning process, the issue areas were not fully identified, nor had there been a complete attempt made to document current energy use. For this reason, Advanced Solutions Group's suggested approach to developing a strategic plan was

to first identify the Who, What, Where and How of the City's use of energy; utilizing technical experts in each relevant topic area. The second step was to establish benchmark data of energy use and then finally, to make recommendations for change based on identified Best Practices, stakeholder input and DOE guidelines for desired outcomes. The final steps of implementation will utilize the bulk of the grant award.

National Sustainable Energy is the federal goal, and the goal set for local governments. The benefits of Energy Efficiency and Conservation have been widely publicized. Assisting with lower future energy costs is but one (but significant) benefit the City of Flint will reap. Every dollar not spent on energy costs is a dollar that the City can utilize for other purposes.

This comprehensive report and plan goes far beyond what was required by DOE and the EECS for use of DOE funding. The EECS process resulted in numerous recommendations for energy efficiency and conservation that either did not require use of DOE funds and/or recommendations that could be financed through other funding mechanisms. All recommendations are contained in this report and Vision of Flint as a Sustainable City.

NOTE – All attachments are contained in the enclosed disk in electronic file version(s).

PART I: INTRODUCTION

BACKGROUND

In 2009, the U.S. Department of Energy (DOE) issued a Funding Opportunity Announcement (FOA) for a formula grant for Entitlement Communities (ATTACHMENT A: DOE AND FEDERAL DOCUMENTS, DE-FOA-0000013, 2009). The City of Flint is a (federally designated) Entitlement Community and as such, qualified for this grant and program called, the Energy Efficiency and Conservation Block Grant (EECBG). Flint's formula allocation grant amount is One Million, One-hundred forty-seven thousand and Nine-hundred dollars ($1,147,900).

In order to access these funds, an eligible grantee had to choose one of two options which involved: 1) application with an accompanying Energy Efficiency Conservation Strategy (EECS), or 2) an application without an accompanying EECS. [NOTE – for purposes of this narrative the EECS may also be referred to as the Strategic Plan and/or the Energy Plan.]

Since the City of Flint (COF) did not have an existing Energy Plan or strategy, they were required to take the course of option two. DOE regulations specified that up to Two-hundred and Fifty thousand dollars ($250,000) of the total grant allocation could initially be accessed in order to provide technical assistance (a consultant) to assist with development of an EECS. Once the EECS had been developed, submitted to DOE and approved, the grantee could then request a draw for the balance of the remaining funds. The regulations also specified that the EECS must be submitted within 120 days of DOE's award of the initial grant.

The COF submitted an option two application through the city's Department of Community and Economic Development (DCED), and subsequently received an award notice of August 10, 2009 (PLEASE REFERENCE ATTACHMENTS B: DOE

SUBMISSIONS, PART I). This meant that the COF must then submit their EECS no later than December 7, 2009.

Following city procurement procedure, DCED issued a Request for Proposal (RFP) for EECS technical assistance and ultimately awarded a contract to Advanced Solutions Group, LLC (ASG). PLEASE REFERENCE ATTACHMENT C: COF EECBG DOCUMENTS, COF EECBG RFP.

THE EECS OR STRATEGIC PLAN

The basics of any Strategic Plan consist of determination of Goals, Objectives and Action Steps according to a specified Mission and Vision. DOE has supplied a Mission and Vision with five Strategic Themes and sixteen Strategic Goals (U.S. Department of Energy, n.d.).

EECBG AUTHORIZING LEGISLATION: THE GOALS

DOE has a predetermined framework that must be adhered to when a grantee (in this case, the City of Flint) is utilizing the funding source of the DOE's EECBG. The grantee must attempt to achieve the Goals or Purposes stated in multiple pieces of Federal Legislation including (DE-FOA-0000013, 2009):

1. The American Recovery and Reinvestment Act of 2009 (ARRA) which has a Goal, or Purpose of stimulation of the economy, job retention and creation (2009).

2. The Energy Independence and Security Act of 2007 (EISA) which created the EECBG program with three main stated Goals, or Purposes (2007):
   a) Reduce fossil fuel emissions in a manner that is environmentally sustainable and, to the maximum extent practicable, maximize benefits for local and regional communities;
   b) Reduce the total energy use of the eligible entities; and
   c) Improve energy efficiency in the building sector, the transportation sector, and other appropriate sectors.

DOE Program Guidance: Core Principles as Objectives

DOE Program Guidance supplies nine Core Principles which are also objectives to be met (DE-FOA-0000013, 2009). These are:

1. Prioritize energy efficiency and conservation first as the cheapest, cleanest, and fastest ways to meet energy demand.
2. To maximize benefits over the longest possible terms, entities should look for ways to link their energy efficiency efforts to long-term priorities (especially community economic development, community stabilization and poverty reduction efforts).
3. Invest funds in programs and projects that create and/or retain jobs and stimulate the economy while meeting long term energy goals.
4. Target programs and projects that will provide substantial, sustainable and measurable energy savings, job creation and economic stimulus effects.
5. Give priority to programs and projects that leverage federal funds with other public and private resources, including coordinated efforts involving other Federal programs targeting community development funded through the Recovery Act such as the Community Development Block Grant program, HOME, and job training programs.
6. To the extent possible, develop programs and strategies that will continue beyond the funding period.
7. Ensure oversight, transparency, and accountability for all program activities.
8. Enact policies that transform markets, increase investments, and support program goals.
9. Develop comprehensive plans that benchmark current performance and set aggressive goals.

DOE Program Guidance: Desired Outcomes

According to DOE, the aforementioned Goals/Purposes and Principles/Objectives must produce at least some of the following desired Outcomes (DE-FOA-0000013, 2009):

1. Increased energy efficiency, reduced energy consumption and reduced energy

costs through efficiency improvements in the building, transportation and other appropriate sectors;

2. New jobs and increased productivity to spur economic growth and community development;
3. Accelerated deployment of market-ready distributed renewable energy technologies, including wind, solar, geothermal, hydropower, biomass and hydrogen technologies;
4. Improved air quality and related environmental and health indicators associated with the reduction of fossil fuel emissions;
5. Improved coordination of energy-related policies and programs across jurisdictional levels of governance and with other local and community level programs in order to maximize the impact of this program on long-term local priorities;
6. Increased security, resilience, and reliability of energy generation and transmission infrastructure;
7. Leveraging of the resources of federal, state and local governments, utilities and utility regulators, private sector and non-profit organizations to maximize the resulting energy, economic and environmental benefits; and
8. Widespread use of innovative financial mechanisms that transform markets.

DOE Program Guidance: Eligible Activities

Flint's choice of activities for the EECBG is predicated upon the list of Eligible Activities stated in the Funding Opportunity Announcement (FOA). The following information about eligible activities is taken directly from DOE's FOA for the EECBG (DE-FOA-0000013, 2009):

A list of eligible activities for use of program funds is contained in Sec. 544 of EISA. Additional activities may be eligible pending approval by the DOE. The activities below are therefore not an exhaustive list and should be used as a guide to the intent of the program. DOE encourages each entity to develop a strategy, including its component activities, that is likely to result in maximum energy efficiency

improvements, fossil-fuel emission reductions, economic benefits and total energy use reduction.

1. Development of an Energy Efficiency and Conservation Strategy: Entities may use a grant received under this part to develop and/or implement a strategy for energy efficiency and conservation and to carry out activities to achieve the purposes of the program. All entities receiving direct formula grants from the DOE are required to submit a proposed strategy for approval.

2. Technical Consultant Services: Entities may retain technical consultant services to assist the eligible entity in the development of such a strategy, including formulation of energy efficiency, energy conservation, and energy usage goals; identification of strategies to achieve those goals through efforts to increase energy efficiency, reduce fossil fuel emissions or reduce energy consumption through investments or by encouraging behavioral changes. Entities may develop methods to measure progress in achieving the goals. Entities may develop and publish annual reports to the population served by the eligible entity describing the strategies and goals and the progress made in achieving them during the preceding calendar year.

3. Residential and Commercial Building Energy Audits: Entities may support the conduct of residential and commercial building energy audits.

4. Financial Incentive Programs: Entities may establish financial incentive programs and mechanisms for energy efficiency improvements such as energy saving performance contracting, on-bill financing, and revolving loan funds.

5. Energy Efficiency Retrofits: Grants may be made to nonprofit organizations and governmental agencies for the purpose of retrofitting existing facilities to improve energy efficiency.

6. Energy Efficiency and Conservation Programs for Buildings and Facilities: Entities may develop and implement energy efficiency and conservation programs for buildings and facilities within the jurisdiction of the entity. The range of activities includes the design and operation of the programs; the identification of the most effective methods for achieving maximum participation and efficiency rates; public education; measurement and verification protocols; and identification of energy efficient technologies.

7. Development and Implementation of Transportation Programs: Entities may develop and implement programs to conserve energy used in transportation, including but not limited to:
    - Employee flex time programs;
    - Promoting use of satellite work centers;
    - Development and promotion of zoning guidelines or requirements that promote energy efficient development;
    - Development of infrastructure such as bike lanes and pathways and pedestrian walkways;
    - Synchronization of traffic signals;
    - State/locals/regional integrated planning activities (i.e. transportation, housing, environmental, energy, land use) with the goal of reducing greenhouse gas emissions and vehicle miles traveled;
    - Incentive programs to reduce commutes by single occupancy vehicles;
    - Improvements in operational and system efficiency of the transportation system such as implementation of intelligent transportation system (ITS) strategies;
    - Idle-reduction technologies and/or facilities to conserve energy, reduce harmful air pollutants, and greenhouse gas emissions from freight movement; and
    - Installation of solar panels on interstate rights-of-way to conserve energy in highway operations and maintenance activities.

8. Building Codes and Inspections: Entities may develop and implement building codes and inspection services to promote building energy efficiency.

9. Energy Distribution: Entities may implement distributed energy resource technologies that significantly increase energy efficiency, including:
    - District heating and cooling systems
    - Combined heat and power systems
    - Cogeneration systems
    - Energy Storage systems
    - Absorption chillers
    - Desiccant humidifiers
    - Micro turbines
    - Ground source heat pumps

10. Material Conservation Programs: Entities may implement activities to increase participation and efficiency rates for material conservation programs, including source reduction, recycling, and recycled content procurement programs that lead to increases in energy efficiency.

11. Reduction and Capture of Methane and Greenhouse Gases: Entities may use grant funds to purchase and implement technologies to reduce, capture, and, to the maximum extent practicable, use methane and other greenhouse gases generated by landfills or similar waste-related sources, such as wastewater treatment plants, operations producing food waste, dairy farms and other animal operations.

12. Traffic Signals and Street Lighting: Entities may use grant funds to replace traffic signals and street lighting with energy efficient lighting technologies, including light emitting diodes; and any other technology of equal or greater energy efficiency.

13. Renewable Energy Technologies on Government Buildings: Entities may use grant funds to develop, implement, and install on or in any government building of the eligible entity onsite renewable energy technology that generates electricity from renewable resources, including solar energy; wind energy; fuel cells; and biomass.

14. Any Other Appropriate Activity: Entities may submit any other appropriate activity for approval in the Energy Efficiency and Conservation Strategy.

FUNDING RESTRICTIONS AND LIMITATIONS ON USE OF FUNDS

Per DOE Guidelines, the following Funding Restrictions and Limitations on use of funds apply:

1. Cost Principles. Costs must be allowable in accordance with the applicable Federal cost principles referenced in 10 CFR part 600. PLEASE REFERENCE ATTACHMENT A: DOE AND FEDERAL DOCUMENTS, 10 CFR 600.

2. Up to 10 percent or $75,000, whichever is greater, of grant funds may be used for administrative expenses, excluding the cost of meeting the reporting requirements of the Program. Administrative costs are the allowable, reasonable, and allocable direct and indirect costs related to overall management of the awarded grant.

3. Up to 20 percent or $250,000, whichever is greater, of the grant funds may be used for the establishment of revolving loan funds.

4. Up to 20 percent or $250,000, whichever is greater, of grant funds may be used for the provision of subgrants to nongovernmental organizations for the purpose of assisting in the implementation of the energy efficiency and conservation strategy of the eligible unit of local government or Indian tribe.

NEPA REVIEW

Per DOE Guidelines, the following National Environmental Policy Act (NEPA) of 1969 requirements apply to the use of EECBG funds:

1. All projects receiving financial assistance from DOE must be reviewed under the National Environmental Policy Act (NEPA) of 1969 – 42 U.S.C. Section 4321 et seq.

2. Based on DOE's review of the list of activities that funds can be utilized for under the EECBG Program, DOE has determined that projects in support of activities 1-3, 6, 7A, 7B, 7C, 7E, 7F, 8-10, and 12 (shown in Table 1.) will likely be classified as categorical exclusions. Therefore, Applicants proposing projects in support of activities 1-3, 6, 7A, 7B, 7C, 7E, 7F, 8-10, and 12 are not required to submit any NEPA documentation at this time. However, DOE reserves the right to request NEPA documentation if during the review process it is determined necessary.

   Applicants proposing projects in support of activities 4, 5, 7D, 11, 13, and 14 (shown in Table 1 below in **bold text**) may also qualify for categorical exclusion status. However, this determination cannot be made without NEPA review. **Therefore, all Applicants proposing projects in support of activities 4, 5, 7D, 11, 13, and 14 must supply the environmental information contained in NETL F 451.1-1/3-EECBG contained in Attachment B3.** This form should be saved in a file named "UIC-NEPA.pdf" and click on "Add Optional Other Attachment" to attach.

   Applicants must know that by proposing projects in support of activities 4, 5, 7D, 11, 13, or 14, the NEPA process could delay the award process; applicants may be restricted to use of funds for planning purposes only until the NEPA process is complete.

All project activities permitted under the EECBG Program and the corresponding required NEPA actions are reflected in the table below:

Table 1

Table of NEPA Requirements by EECBG Project Activities		
ACTIVITY NUMBER	ACTIVITY DESCRIPTION	NEPA ACTION REQUIRED AT THIS TIME
1.	development and implementation of an energy efficiency and conservation strategy under section 545(b);	No further action needed at this time
2.	retaining technical consultant services to assist the eligible entity in the development of such a strategy, including— A. formulation of energy efficiency, energy conservation, and energy usage goals; B. identification of strategies to achieve those goals— (i) through efforts to increase energy efficiency and reduce energy consumption; and (ii) by encouraging behavioral changes among the population served by the eligible entity; C. development of methods to measure progress in achieving the goals; D. development and publication of annual reports to the population served by the eligible entity describing— (i) the strategies and goals; and (ii) the progress made in achieving the strategies and goals during the preceding calendar year; and E. other services to assist in the implementation of the energy efficiency and conservation	No further action needed at this time

	strategy;	
3.	residential and commercial building energy audits;	No further action needed at this time
4.	**establishment of financial incentive programs for energy efficiency improvements;**	**Complete NETL F 451.1-1/3-EECBG and submit with application**
5.	**the provision of grants to nonprofit organizations and governmental agencies for the purpose of performing energy efficiency retrofits;**	**Complete NETL F 451.1-1/3-EECBG and submit with application**
6.	development and implementation of energy efficiency and conservation programs for buildings and facilities within the jurisdiction of the eligible entity, including— A. design and operation of the programs; B. identifying the most effective methods for achieving maximum participation and efficiency rates; C. public education; D. measurement and verification protocols; and E. identification of energy efficient technologies;	No further action needed at this time
7.	development and implementation of programs to conserve energy used in transportation, including— A. use of flex time by employers; B. satellite work centers; C. development and promotion of zoning guidelines or requirements that promote energy efficient development;	No further action needed at this time
	D. development of non-highway transportation infrastructure, such as bike	**Complete NETL F 451.1-1/3-EECBG and submit**

	lanes and pathways and pedestrian walkways;	**with application**
	E. synchronization of traffic signals; and F. other measures that increase energy efficiency and decrease energy consumption;	No further action needed at this time
8.	development and implementation of building codes and inspection services to promote building energy efficiency;	No further action needed at this time
9.	application and implementation of energy distribution technologies that significantly increase energy efficiency, including— A. distributed resources; and B. district heating and cooling systems;	No further action needed at this time
10.	activities to increase participation and efficiency rates for material conservation programs, including source reduction, recycling, and recycled content procurement programs that lead increases in energy efficiency;	No further action needed at this time
11.	**the purchase and implementation of technologies to reduce, capture, and, to the maximum extent practicable, use methane and other greenhouse gases generated by landfills or similar sources;**	**Complete NETL F 451.1-1/3-EECBG and submit with application**
12.	replacement of traffic signals and street lighting with energy efficient lighting technologies, including— A. light emitting diodes; and B. any other technology of equal or greater energy efficiency;	No further action needed at this time
13.	**development, implementation, and**	

	installation on or in any government building of the eligible entity of onsite renewable energy technology that generates electricity from renewable resources, including— **A. solar energy;** **B. wind energy;** **C. fuel cells; and** **D. biomass; and**	**Complete NETL F 451.1-1/3-EECBG and submit with application**
14.	**any other appropriate activity, as determined by the Secretary, in consultation with—** **A. the Administrator of the Environmental Protection Agency;** **B. the Secretary of Transportation; and** **C. the Secretary of Housing and Urban Development.**	**Complete NETL F 451.1-1/3-EECBG and submit with application**

Utilizing the established framework set forth by the Federal Legislation and DOE Guidelines, Advanced Solutions group used the following methodology to assist the City of Flint with development of their Energy Efficiency and Conservation Strategy.

PART II: METHODOLOGY

PROCESS: THE CONSTRUCTION OF AN ENERGY EFFICIENCY AND CONSERVATION STRATEGY

The sequential steps utilized to create Flint's Energy Efficiency and Conservation Strategy (EECS) consisted of:

1. A review of relevant Legislation, Regulations and DOE Energy Efficiency and Conservation Block Grant (EECBG) Guidance
2. Determination of relevant Topic Areas and Issues
3. Securing topic area expertise – the use of consultants and subconsultants
4. Data collection, analysis and recommendations
5. Distribution and review of analysis and recommendations
6. Recommendation and selection of EECBG Grant Allocations
7. NEPA determination and review
8. DOE EECS Submission
9. Comprehensive strategy and report for City of Flint
10. Project Implementation

Relevant Legislation, Regulations and DOE Guidance

A careful review was conducted of all documents that were relevant to DOE's Funding Opportunity Announcement (FOA) DE-FOA-0000013. These documents included:

- All amendments to the original FOA (were reviewed for any changes and/or additions.)
- All of DOE's guidance and regulatory requirements including:
  - ✓ M-09-10 Initial Implementing Guidance for the American Recovery and Reinvestment Act of 2009 (and any additional guidance that may subsequently be issued.)
  - ✓ Federal Financial Assistance Regulations - 10 CFR 600

- ✓ Federal Acquisition Regulations (FAR)
- ✓ OMB Circular A-87 (For Local Government)
- ✓ 48 CFR Part 31 (For Profit Organization)
- ✓ 48 CFR 931.2 (For Profit Organization)

- All requirements of the American Reinvestment and Recovery Act of 2009, Public Law 111-5 (as it relates to this funding opportunity), and also the requirements of the Energy Independence and Security Act of 2007 (EISA) which authorized the EECBG program and is set forth in Title V, Subtitle E.

Relevant Energy Topic Areas and Issues

The next step was to Identify and catalogue those topic areas, issues and areas that are relevant to Flint's EECBG including opportunities for Energy Efficiency and Conservation within City of Flint operations. Advanced Solutions Group determined that these areas and topics included:

1. Introduction to EECBG Strategic Planning
2. Green Jobs
3. Federal and State Legislation affecting energy, energy use, potential programs and projects including:
4. Michigan Renewable Portfolio Standards
5. Net Metering
6. Feed-In-Tariffs
7. Smart Grid
8. Brownfields
9. Energy Efficient Building Practices and Trainings
10. LEED Building Practices and Trainings
11. City of Flint Buildings and Facilities – Investment Grade Energy Audits (IGAs), Conservation Measures, ESCO Financing and Consumers Energy Rebates
12. Building Automation for City of Flint Buildings and Facilities

13. Renewal Energy Generation
14. Renewable Energy Ordinances for Zoning, Planning and Building
15. Alternative Fuels
16. Traffic and Street Lighting
17. Alternative Transportation
18. Materials Recovery and Waste Disposal
19. Green Purchasing Policies
20. Financing Municipal Energy Projects
21. Potential "Other Grants" funding
22. Flint-Genesee Energy Coalition
23. The Strategic Plan – Synopsis, Prioritization and Recommendations

Topic Area Energy Expertise: Consultants and Subconsultants

After these topic and issue areas were identified, expert subconsultants were hired by Advanced Solutions Group to collect relevant City of Flint data, analyze the data and make recommendations based on Best Practices as well as their collective expertise and experience in the topic areas. The following topics were assigned to the following subcontractors and companies:

Table 2

Company	Company Principal	Topic
Advanced Solutions Group	Kate Fields	Introduction to EECBG Strategic Plan
		COF Facilities IGAs, ESCOs & Rebates
		Green Purchasing Policies
		Potential "Other Grants" Funding
		Flint-Genesee Energy Coalition
		The Strategic Plan – Synopsis, Prioritization and Recommendations

AltEnergy	Dr. Juan Pimentel	Smart Grid
		Building Automation
		Renewable Energy Generation
		Traffic and Street Lighting
American Green Careers	Karl Kaufman	Green Jobs
		Energy Efficient Building Practices
		LEED Building Practices
Dickinson & Wright	Craig Hammond	Financing Municipal Energy Projects
Gault Davison	Kevin Lavalle	Brownfields
		Renewable Energy Ordinances
Kathleen Law	Kathleen Law	Energy Legislation
Pure Eco Environmental Solutions	Dr. Lawrence Oswald	Alternative Fuels
		Alternative Transportation
		Materials Recovery & Waste Disposal

Data Collection

The following data was collected from/about the City and provided to subconsultants per their assigned topic areas:

1) **Consumers Energy and COF Traffic and Street Lighting Contract**
    - 1977 original contract has renewed automatically every five years.
    - Due for renewal in June or July of 2010.
    - Contract (and negotiated rate) only affects Traffic and Street Lighting, all other energy utilities consumed have standard rates that are predetermined by the Michigan Public Utility Commission.
    - COF owns Traffic Lights but Consumers Energy currently owns Street Lights.
    - Street Lighting rates include cost of lighting maintenance. That's why the per kilowatt hour rate is so high ($.28¢ per kWh).

- The COF believes that they are being charged for many more Street Lights than are actually present. Consumers Energy is currently conducting an inventory of actual Street Lights.
- COF cannot find their copy of the original contract. Copy of contract was obtained from Consumers Energy (PLEASE SEE ATTACHMENT D: COF DATA AND INFORMATION – FINANCE DEPARTMENT).

2) COF Owned and Operated Buildings

COF owned and operated buildings and facilities (utilizing utilities and energy) with year built and approximate square footage:

- William Fowler, City Assessor, provided a spreadsheet of properties he believed were city-owned and city-operated. Several suspect properties on the list (PLEASE SEE ATTACHMENT D: COF DATA AND INFORMATION – CITY ASSESSOR) such as "Mack's Auto Glass" and "Video Store".
- This list did not include vacant lots or miscellaneous properties the city may have obtained due to abandonment, foreclosure or to be utilized for future development projects (e.g., Smith Village, Homeownership Zone).
- This list does not include properties that the COF is leasing. The city pays utilities on most leased properties, but there is no data collected regarding how many and why, or what, properties are being leased (e.g., Mini-Police Stations).
- How many physical structures (buildings) on a parcel owned by the COF is unknown because this data is not collected (e.g., Water Plant/Facilities) or was not provided in the spreadsheet report.

3) Checklist of COF buildings and facilities currently open and operating

- The COF ownership spreadsheet was given to Lee Osborne, Facilities Manager, with a request to note which buildings were in operation with days and hours of operation. A response was received which just stated (next to the facility) Yes or No. The specific information requested was not received.

4) **Twelve months of Consumers Energy utility bills (accounts paid by COF)**

This information was provided by Consumers Energy for the time period starting November 2008 and ending October 2009: PLEASE SEE ATTACHMENT D: COF DATA AND INFORMATION, FINANCE DEPARTMENT – CONSUMERS ENERGY SUMMARIZED.

- This request for information was made to Consumers because the city does not track specific units of electricity or gas used by bill or account number. The Finance Department pays bills by account numbers, files the invoices and just enters the total amount of bill paid, by invoice number. City reports can only be run on total amount of bill paid, by Consumers Account Number. In order to calculate energy usage it is necessary to know units of energy consumed per a particular time period. Electricity is measured per kilowatt hour (Kwh) and natural gas is measured per how many thousands of cubic feet are used (Mcf).
- The COF Finance Department provided several spreadsheet reports that the department has been working on, which are currently not complete. There has been a beginning attempt made to cross-reference Consumers Accounts with a physical site or location, and to ascertain whether or not the facility is operational or closed. Since these reports and analysis are not complete, they had limited usefulness.

5) **Fleet Inventory and two year's worth of Fuel Bills paid by COF**

The COF Fleet Manager provided an inventory list of all COF vehicles. The spreadsheet included field information including department (number code), equipment number, description (name of vehicle) and all vehicles were marked as In Service (IS). The status, or condition of the vehicle, was not provided. : PLEASE SEE ATTACHMENT D: COF DATA AND INFORMATION, TRANSPORTATION – FLEET INVENTORY.

- The COF Fleet Manager provided a spreadsheet of Fuel Charges paid by the COF for 2008 and 2009. PLEASE SEE ATTACHMENT D: COF DATA AND INFORMATION, TRANSPORTATION – 2008 AND 2009 FUEL CHARGES. This spreadsheet included field information organized as follows:

- Which COF fund the expense is paid out of
- Which department budget pays the expense
- The account number
- The department ID
- The total quantity of diesel gas purchased (assumed per gallon)
- The total quantity of unleaded gas purchased (assumed per gallon)
- The total monetary amount paid for the purchases
- The equipment count (or how many vehicles were fueled)
- The (calculated) annual cost per vehicle category

- Neither the 2008 or 2009 Fuel Charges spreadsheets included total data on the use of fuels by the Water Pollution Control (WPC) fleet. The Fleet Manager stated that WPC has their own fuel tank and Fleet has no data on fuel usage from that pump

6) Inventory of COF equipment owned and operated, by Department

- A request was made for a list of employees, by department, who utilize Fleet Inventory per shift. This information was not provided but instead, a report was provided (by the Director of Transportation) of Equipment Inventory by Department, as of November 5, 2009. This report provided fields of information as follows:
  - Department name and code number (including sub-divisions)
  - Equipment ID number
  - Description of equipment
  - Account code
  - License Number (if applicable)
  - Year of manufacture or model
  - Manufacturer name
  - Model name
  - Serial number

PLEASE SEE ATTACHMENT D: COF DATA AND INFORMATION, TRANSPORTATION – INSERVICE EQUIPMENT LIST.

7) **Inventory: Computers and Technology Equipment**

Inventory of computers and technology equipment utilized by COF and maintained by Information Technology Services (ITS). A request was made for a list of all ITS computers and related equipment. PLEASE SEE ATTACHMENT D: COF DATA AND INFORMATION, IT – INVENTORIES.

- Information also requested:
  - What facility has what equipment?
  - What facilities is ITS responsible for and who is responsible for other facilities?
  - How does the city receive their internet connections?
  - What are the fees for internet connections, at what facilities?
  - What provisions are made (i.e., mechanical, technical and per city policy) for putting unused equipment into "sleep" or "power-down" mode?
  - What is the city policy for disposal or recycling of old hardware?
- The (provided) 2009 IT Computer Inventory lists 519 Computers, but the narrative accompanying the report stated that ITS supports over 700 personal computers at the following locations:
  - City Hall Complex
  - Police
    - Main Station
    - Mini-Stations (Ballenger, Career Resource, East Side, West Side, South Side, South East)
    - Impound Lot
    - Training Academy
  - Fire Stations
    - 911 Call Center
    - Station 1

- Station 3
- Station 4
- Station 5
- Station 6
- Station 8

➢ Golf Courses
- Kearsley Park
- Swartz Creek
- Mott Park
- Pierce Park

➢ Senior Centers (The community centers purchased their own computers using funds from a senior mileage that passed in 2008. Currently, the centers are not on the City's network, nor are they included in the 2009 IT Computer Inventory.)
- Hasselbring
- Brennan
- Pierce Park
- Vista Center

➢ Other - Off site locations
- 12Th Street Garage
- Water Service Center
- Water Plant
- Water Pollution Control
- Parks & Forestry
- Flint Area Enterprise & Community
- 68th District Court
- Oak Business Center

• The (provided) 2009 IT Computer Inventory is a Worksheet which provides the following fields of information:

➢ Which department has what quantity of computers

➢ Asset Tag Numbers

- Make
- Model
- Hours in use per day
- Year Purchased
- Technical Specifications per model types

- The (provided) 2009 IT Servers Inventory is a Worksheet which provides the following fields of information:
  - Department/Division
  - Server Name
  - Make
  - Model
  - Power
  - Hours in use per day
  - Year Purchased

8) COF Purchasing Policies (by Ordinance)

- Upon request, the COF provided current city purchasing policies which included:
  - Ordinance Chapter 18: Taxation; Funds; Purchasing, Article V. Purchases, Sections:
    - 18-18 Short title
    - 18-19 Definitions
    - 18-20 Director of Purchases and Supplies
    - 18-21 Director to have supervision of purchase and distribution of supplies, materials and equipment
    - 18-21.1 Additional duties and responsibilities of Director
    - 18-21.2 Requisition and estimates
    - 18-21.3 Encumbrance of funds
    - 18-21.4 Competitive bidding required
    - 18-21.5 Formal contract procedure
    - 18-21.6 Open market procedure

- 18-21.7 Petty expenditures revolving fund
- 18-21.8 Central warehousing; Storerooms Revolving Fund
- 18-21.9 Price agreement contract procedure
- 18-21.10 Emergency purchases
- 18-21.11 Inspection and testing
- 18-21.12 Surplus supplies
- 18-21.13 Cooperative purchasing
- 18-21.14 Sale or lease of city owned property

- Ordinance No. 3751 Amending Chapter 18, Article IV Purchases, Section 18-21.5 – Formal Contract Procedure, effective April 27, 2009

PLEASE SEE ATTACHMENT D: COF DATA AND INFORMATION, PURCHASING – PURCHASING POLICIES.

9) Current DCED grant programs that have an energy component

Grants include:

- Annual Community Development Block Grant (CDBG)
- Annual HOME Investment Partnership
- Community Development Block Grant Recovery Funds (CDBG-R)
- Neighborhood Stabilization Program (NSP) Round I
- Homeless Prevention Emergency Response (HPER)
- Neighborhood Stabilization Program (NSP) Round 2

PLEASE SEE ATTACHMENT D: COF DATA AND INFORMATION, DCED.

10) All COF planning documents relevant to grant programs

These documents include:

- 2005-2010 Consolidated Plan
- 2008-2009 Action Plan of the Consolidated Plan
- 2009-2010 Action Plan of the Consolidated Plan

- Neighborhood Plans:
    - Flint Park Lake Redevelopment Plan
    - Metawananee Hills AIA Plan
    - Northeast Village Redevelopment Plan
    - Smith Village Redevelopment Plan
    - Flint Eastside Weed and Seed Partnership
- Urban Renewal Zone (NOTE – this program/plan has been due to phase out but it may get a one year extension)

PLEASE SEE ATTACHMENT D: COF DATA AND INFORMATION, DCED.

11) Relevant miscellaneous Grants awarded to COF

- Michigan State Housing Development Authority (MSHDA)
    - Cities of Promise
- Brownfields

12) Pending Grant Awards (with energy component)

- During the EECS time period the COF made application for two additional grants which were energy related.
    - State of Michigan LED Demonstration Grant – the COF was not an award recipient
    - DOE Retrofit Ramp Up DE-FOA-0000148 – Award Decision Pending

Distribution of compiled data, analysis and recommendations

The distribution method for compiled data, analysis and recommendations was constructed to achieve the following objectives:

A. Meet ARRA requirements of transparency and accountability.
B. Inform and educate the general public and area Stakeholders about EECBG and the City of Flint's approach to the construction of an EECS.

C. Inform and educate City Administration and City Council about EECBG and options for Flint's EECS.

The distribution method included:

A. The preparation and submission of a written report and PowerPoint Presentation by each consultant and subconsultant on the assigned Topic Areas.
   1. Twenty-five copies of each report was submitted to Advanced Solutions Group and distributed to the following:
      - Dayne Walling, Mayor
      - Gregory Eason, City Administrator
      - Delrico Loyd, 1st Ward City Councilperson
      - Jackie Poplar, 2nd Ward City Councilperson
      - Bryant Nolden, 3rd Ward City Councilperson
      - Joshua Freeman, 4th Ward City Councilperson
      - Bernard Lawler, 5th Ward City Councilperson
      - Sheldon Neeley, 6th Ward City Councilperson
      - Dale Weighill, 7th Ward City Councilperson
      - Michael Sarginson, 8th Ward City Councilperson
      - Scott Kincaid, 9th Ward City Councilperson
      - Inez Brown, Flint City Clerk
      - Steve Montle, Green Cities Coordinator
      - Department of Transportation
      - Traffic and Street Lighting
      - Sanitation
      - Fleet Inventory
      - Facilities Management
      - Department of Human Resources
      - Information Technology Services
      - Finance Department
      - Purchasing Department

- Department of Community and Economic Development
- Amy Butler, Director, State of Michigan Energy Bureau
- Advanced Solutions Group – Archive Copy

2. The consultants and subconsultants were also required to submit electronic file copies of their reports and PowerPoint presentations.

B. Presentations of reports and PowerPoints were presented at a five-day seminar series held in Flint City Council Chambers. PLEASE SEE ATTACHMENT C: COF EECBG – PRESENTATION SCHEDULE. The Presentations:

1) Were open to the general public, any/all Community Stakeholders and all City Employees.
2) Were announced by Mayor Dayne Walling through a mailing notification letter sent to 531 Community Leaders and Stakeholders. PLEASE SEE ATTACHMENT C: COF EECBG – MAYOR'S INVITATION AND MAILING LIST.
3) Were announced on continuous Public Service Announcements (Community Calendar) via Public Access Cable, Channel 17.
4) Were announced via a Press Release sent out by the Mayor's Office.
5) Were held Monday through Friday, November 16-20 from approximately 3:00 PM through 6:00 PM.
6) Were grouped into five categorical Topic Areas for each of the five days. These Topic Areas and specific presentations were:
   - **Monday, November 16** - Community and Economic Development: Energy and Green Jobs
     - Welcome to the City of Flint's Energy Future – an introduction by Mayor Dayne Walling, City Administrator Gregory Eason and Green Cities Coordinator Steve Montle
     - Introduction to Energy Efficiency and Conservation Strategic Planning – by Kate Fields, Advanced Solutions Group
     - Green Jobs – by Karl Kaufman, American Green Careers
     - Michigan Renewable Portfolio Standards, Net Metering and Feed-In-Tariffs – by Kathleen Law Former House Representative

- Smart Grid – by Dr. Juan Pimentel, AltEnergy
- Brownfields – by Kevin Lavalle, Esquire, Gault and Davison P.C.

- **Tuesday, November 17** – Energy Efficiency and Conservation
  - Energy Efficient Building Practices and Trainings – by American Green Careers
  - LEED Green Building Practices and Trainings – by American Green Careers
  - City of Flint Facilities, Investment Grade Energy Audits and Consumers Energy Rebates – by Kate Fields, Advanced Solutions Group
  - Energy and Building Automation – by Dr. Juan Pimentel, AltEnergy
- **Wednesday, November 18** – Renewable Energy
  - Renewable Energy Generation – by Dr. Juan Pimentel, AltEnergy
  - Renewable Energy Ordinances – by Kevin Lavalle, Esquire, Gault and Davison PC
  - Alternative Fuels – by Dr. Lawrence Oswald, Pure Eco Environmental Solutions
- **Thursday, November 19** – Energy and "Green" City Operations
  - Traffic and Street Lighting – by Dr. Juan Pimentel, AltEnergy
  - Alternative Transportation – by Dr. Lawrence Oswald, Pure Eco Environmental Solutions
  - Waste-to-Energy – by Dr. Lawrence Oswald, Ryan Oswald, Pure Eco Environmental Solutions
  - Green Purchasing Policies – by Kate Fields, Advanced Solutions Group
- **Friday, November 20** – Funding Energy and Green Initiatives
  - Financing Municipal Energy Projects – by Craig Hammond, Esquire, Dickinson and Wright
  - Potential "Other Grants" Funding – by Kate Fields, Advanced Solutions Group
  - Flint-Genesee Energy Coalition

- The EECBG Strategic Plan: Synopsis, Prioritization and Recommendations – by Kate Fields, Advanced Solutions Group
- Concluding Remarks – City of Flint Administration

7) Were Video Taped for:
    - DVD distribution and post-review by City Administration and City Council
    - Posting and inclusion on City of Flint web site (a new Energy Page to be created)
    - Public Access Cable TV (Channel 17) screenings and viewings
8) Were Sign Language Interpreted for the Deaf by AAA Interpreting Services

Recommendation and selection of EECBG Grant Allocations

Prior to the EECS submission to DOE, City of Flint procedure requires that specific grant allocations be approved (by resolution) by Flint City Council. In order to make recommendations to City Administration and City Council for use of DOE EECBG funds the following distinctions and decision metrics were utilized for grouping of recommendations:

A. Activities and Projects that can be implemented <u>without</u> EECBG funds or additional funding
B. Activities and Projects that can be financed through <u>Funding Mechanisms other than</u> EECBG
C. Activities and Projects that require, or are best served, through <u>use of EECBG funds</u>

[NOTE – All recommendations also followed DOE Program Guidelines for 1) Funding Restrictions and Limitations on use of funds and, 2) NEPA requirements]

NEPA Determination and Review

The only recommended EECBG funding allocations that met the requirement for NEPA review were for a Revolving Loan Fund, Part I and Part II. PLEASE REFERENCE ATTACHMENT B: DOE SUBMISSIONS, MI NETL'S RLF PARTS I AND II.

DOE EECS Submission

The DOE has specific forms, in a specific format, required for EECS submission. The products of Flint's EECS process resulted in many more strategies, activities and action step recommendations than those just involving the use of EECBG funds, but DOE only wanted reporting on those activities that were going to utilize their grant monies.

The (fillable pdf) forms required for submission limited the narrative that could be provided so the narrative for complex programs was by necessity, condensed.

ASG completed the forms and forwarded them to DCED for submission to DOE. Only the City (the grantee) could actually submit these documents. The submission included:

- Form SF424 - Application
- Form SF424A – Budget
- Budget Justification
- Attachment D – Energy Efficiency and Conservation Strategy
- Project Activity Worksheet 1 – Technical Assistance for development of EECS
- Project Activity Worksheet 2 – RLF Part I: Homeowner Energy Audits and EE Conservation Retrofits
- Project Activity Worksheet 3 – RLF Part II: Business subsidy/loans for Recycled Products Manufacturers
- Project Activity Worksheet 4 – Residential Energy Audits
- Project Activity Worksheet 5 – Building Automation
- Project Activity Worksheet 6 – Greenhouse Gas Emissions data collection and reporting
- Project Activity Worksheet 7 – Materials Recovery and Waste Management

- Project Activity Worksheet 8 – Five Project (Management) Technical Assistance
- NETL (NEPA Review) – Revolving Loan Fund Part I
- NETL (NEPA Review) – Revolving Loan Fund Part II

PLEASE REFERENCE ATTACHMENT B: DOE SUBMISSIONS.

ASG submitted these documents to DCED prior to the December 7, 2009 deadline. DOE subsequently informed ASG that the city's submission date could actually be as late as December 10, 2009. DCED submitted the documents to DOE in a timely manner.

Comprehensive Strategy and Report

An additional report was prepared and submitted to the City of Flint (Mayor, City Administrator, DCED and Flint City Council) which provided narrative and attachments comprising the entire project. This report provides a comprehensive Energy Efficiency and Conservation strategy for the city and includes recommendations for Activities, Programs and Projects which:

A. Can be implemented <u>without</u> EECBG funds or additional funding
B. Can be implemented and financed through <u>Funding Mechanisms other than</u> EECBG
C. Require, or are best served, through <u>use of EECBG funds</u>

Project Implementation

The DOE EECBG allocations include a line item budget of One-hundred Fifty-thousand dollars ($150,000) to allow for project implementation. A decision on how, and who, will implement these projects needs to be defined and approved by City Council and City Administration.

PART III: PLANNING PROCESS NARRATIVE

SYNOPSIS OF RELEVANT TOPIC AREAS AND ISSUES

The topic areas and issues that affect energy and energy conservation are numerous. Referencing DOE's program goals and guidelines for EECBG, the following topics were chosen, for the following reasons:

Introduction to EECBG Strategic Planning

An overview was presented which explained:

A. Legislative history which created EECBG program
B. Purpose of EECBG Program
C. Goals of EECBG Program
D. Core Principles as Objectives
E. Desired Outcomes
F. Eligible Activities
G. Funding Restrictions and Limitations on use of funds
H. NEPA Review
I. Requirement of EECS or Strategic Plan
J. COF Timeline Requirements
K. Methodology being employed for development of COF EECS

PLEASE REFERENCE ATTACHMENT E: CONSULTANT REPORTS –*INTRODUCTION TO EECBG STRATEGIC PLANNING*

Green Jobs

Given the state of the national, state and local economy, the provision of jobs and "Green" economic development have become priority issues. There has been confusion about what actually constitutes a green job. How are these jobs different from regular jobs? What are the opportunities for our local area and what is involved in preparing for these opportunities for our residents? What

categories of activities do green jobs encompass? What types of skills and certifications are required? What types of jobs training, placement and other assistance is available locally? The answers to these questions were provided by one of Flint's local green jobs training and certification entities, American Green Careers. PLEASE REFERENCE ATTACHMENT E: CONSULTANT REPORTS –*GREEN JOBS.*

Legislation affecting energy issues

There are many intergovernmental layers of Federal and State Legislation affecting energy, energy use, potential programs and projects. [Relevant Federal Legislation has been previously referenced in Methodology: Section 1.] The State of Michigan has also recently enacted some pertinent legislation and one proposed House Bill in particular (HB5218) could have enormous positive ramifications for energy and green economic development in our state. Former District 23 Michigan Representative (2003-2008) Kathleen Law explained Michigan's current energy legislation and why her proposed HB5218 – Renewable Energy Sources Act (Feed-In-Tariff), is crucial to development of our state's green economic development and future prosperity. PLEASE REFERENCE ATTACHMENT E: CONSULTANT REPORTS –*KATHLEEN LAW HB 5218.*

MICHIGAN RENEWABLE PORTFOLIO STANDARDS

In 2008 Michigan passed legislation setting Renewable Portfolio Standards for our state. The package mandates "10 percent of the state's energy come from renewable sources by 2015, regulatory reform that protects Michigan ratepayers and allows utility companies to build new electricity generation in Michigan, and a requirement that utilities meet an additional 5.5 percent of Michigan's annual electricity demands through energy efficiency by 2015."

NET METERING

Also enacted in 2008, Public Act 295 includes a new net metering program for customers of all Michigan Public Service Commission-rate regulated utilities and cooperatives. Additionally, Michigan's Alternative Electric Supplier customers can participate.

Net Metering is a practice used in conjunction with a renewable energy (e.g., Solar, Wind) electric system where your electric meter tracks your net power usage, spinning forward when you use electricity from the utility, and spinning backward when your system is generating more electricity than you need.

The Utility Company charges you for the electricity you use and you are credited or paid for the electricity you put back into the system.

The Utility Company usually charges you a higher rate for the energy you use from them and pays you at a lesser rate for the energy you put back into the system.

In Michigan, customers are also charged additional fees for Net Metering by the Utility Companies

FEED-IN-TARIFFS

Sponsored by Kathleen Law as HB5218 Renewable Energy Sources Act, this proposed legislation is commonly known as a form of Feed-In-Tariff. Feed-in tariffs are simply payments per kilowatt-hour for electricity generated by a renewable resource.

They are the world’s most successful policy mechanism (legislative) for stimulating the rapid development of renewable energy.

Renewable Tariffs enable homeowners, farmers, cooperatives, and First Nations (Native North Americans) to participate on an equal footing with large commercial developers of renewable energy.

Electricity Feed Laws permit the interconnection of renewable sources of electricity with the electric-utility network and at the same time specify how much the renewable generator is paid for their electricity and over how long a period.

Smart Grid

A Smart Grid is simply a modernization of the electricity delivery system (current technology dates back to the 50s and 60s). Dr. Juan Pimentel, a Professor at Kettering University and CEO of AltEnergy explained that the Smart Grid monitors, protects and automatically optimizes the operation of its interconnected elements:

- From the central and distributed generator through
- High-voltage network and distribution system, to
- Industrial users and building automation systems, to
- Energy storage installations and to
- End-use consumers and their thermostats, electric vehicles, appliances and other household devices

A. Smart Grid Benefits include:

- **Power reliability and power quality**.
- **Safety and cyber security benefits.** The Smart Grid continuously monitors itself to detect unsafe or insecure situations that could detract from its high reliability and safe operation.
- **Energy efficiency benefits.** It provides reduced total energy use, reduced peak demand, and reduced energy losses.
- **Environmental and conservation benefits.** The Smart Grid is “green”. It helps reduce greenhouse gases (GHG) and other pollutants.

- **Direct financial benefits.** Operations costs are reduced or avoided. Customers have pricing choices and access to energy information.

B. Stakeholders Benefits include:

- **Consumers.** Consumers can balance their energy consumption with the real time supply of energy. Variable pricing will provide consumer incentives.
- **Utilities.** Utilities can provide more reliable energy, particularly during challenging emergency conditions.
- **Business enterprises.** These will benefit from business and product opportunities around Smart Grid components and systems.
- **Society.** Society benefits from more reliable power for governmental services, businesses, and consumers sensitive to power outage.

PLEASE REFERENCE ATTACHMENT E: CONSULTANT REPORTS –*SMART GRID.*

Brownfields

Are no longer just an issue of dealing with environmental contamination. As attorney Kevin Lavalle (Gault & Davison, P.C.) explained:

- Brownfield programs were initially carved out from environmental programs designed to address the threat of contamination.
- Beginning in early 2000, Brownfield projects were no longer viewed merely as extensions of environmental cleanup programs but rather as tools designed to further urban growth management initiatives.

Brownfields are an integral component of initiatives which seek to conserve energy and promote green community and economic development. Some of the benefits of Brownfield Redevelopment include:

- Benefits to the community;
- Eliminating health and safety hazards;
- Eliminating eyesores;

- Bringing new jobs into the community;
- Bringing new investment into the community;
- Increasing the productivity of the land; and
- Increasing property values and tax receipts by local and state governments.

Mr. Lavalle also explained that in Michigan the Green Economy and Brownfields are intertwined because the 2009 Michigan Economic Development Corporation (MEDC) Brownfield Program Guidelines are biased towards projects that promote a Green Economy:

- Green Buildings
- Green Jobs
- Smart Growth

PLEASE REFERENCE ATTACHMENT E: CONSULTANT REPORTS –*BROWNFIELDS.*

Energy Efficient Building Practices and Trainings

American Green Careers presented on the topic of Energy Efficient Building Practices and Trainings. PLEASE REFERENCE ATTACHMENT E: CONSULTANT REPORTS – *ENERGY EFFICIENT BUILDING PRACTICES AND TRAININGS.*

DOE's Core Program Principles and Objectives state, "Prioritize energy efficiency and conservation first as the cheapest, cleanest, and fastest way to meet energy demand."

Efficiency and Conservation Are Different but Related

The terms energy conservation and energy efficiency have two distinct definitions. There are many things we can do to use less energy (conservation) and use it more wisely (efficiency).

Energy conservation is any behavior that results in the use of less energy. Turning the lights off when you leave the room and recycling aluminum cans are both ways of conserving energy.

Energy efficiency is the use of technology that requires less energy to perform the same function. A compact fluorescent light bulb that uses less energy than an incandescent bulb to produce the same amount of light is an example of energy efficiency. However, the decision to replace an incandescent light bulb with a compact fluorescent is an act of energy conservation.

It's estimated by the U.S. Building Council that 71% of our nations' use of electricity is in building consumption. It's obvious that Energy Efficiency and Conservation in this area merits our priority efforts.

There are numerous (building energy consumer) stakeholders to consider in our community including:

- Residents
- Business
- Institutions and other non-profits
- Government

The applied principles of basic energy efficiency and conservation are the same for all stakeholders and all types of buildings. They include:

- Prevention of loss of energy through a building envelope (Air Sealing and Insulation)
- Prevention of loss of energy through mechanical systems (Heating and Cooling)
- Use of most energy efficient
  - Lighting and electrical
  - Equipment and Appliances
  - Water Management

One of DOE's stated Desired Outcomes is,

> *" Improved coordination of energy-related policies and programs across jurisdictional levels of governance and with other local and community level programs in order to maximize the impact of this program on long-term local priorities;"*

Therefore, this topic area is one of the most expanded issue areas of the EECS process. The Energy Efficient Building Practices and Trainings component is applicable for any type of building, but the presentation emphasis is on residential buildings. It consists of:

A. Building Science – looking at a building as a system with interacting components.
B. Basic EE&C applied principles and activities applicable for any type of building.
C. Homeowner (and Community) education regarding Energy Audits and the specific components of an Energy Audit:
    - The Energy Auditor and Certifications
        - Building Performance Institute (BPI)
        - RESNET and HERS Ratings
    - The Tests conducted by an Energy Auditor
        - Health and Safety – Combustion Gas Testing
        - Duct Blasting
        - Blower Door Testing – for Air Infiltration
        - Thermal Imaging – Insulation and Air Infiltration
        - A Comprehensive Report
D. Energy Efficiency
    - Energy Star web site as a resource
    - Energy Star certified energy efficient appliances and equipment
    - Energy Star - Lighting
    - Deconstruction

- Water Management
- Return on Investment (ROI)

Additionally, provisions have been made for a Training Video (available on the COF web site) which will exhibit the information above, as well as demonstrate techniques for the Energy Conservation Measures to be taken. This Training Video is intended to inform and educate:

- Residents (including Homeowners and Renters)
- Landlords
- Building Contractors and Private Industry
- Subrecipients of COF housing grants, for COF housing programs
- The general public

RELEVANCE TO CITY OF FLINT GRANT FUNDED PROGRAMS

The COF is currently the grantee for several (mostly Federal) grants which have a housing program component. These programs involve retrofitting older residential structures that are not currently energy efficient. To meet the DOE's stated Desired Outcomes the city intends to make energy efficiency an element of all housing programs. The main Federal grants are:

- Community Development Block Grant (CDBG)
- Community Development Block Grant Recovery Funds (CDBG-R)
- HOME Investment Partnership
- Neighborhood Stabilization Program (NSP) Round 1
- Neighborhood Stabilization Program (NSP) Round 2
- Homeless Prevention Emergency Response (HPER)

LEED Building Practices and Trainings

American Green Careers presented on the topic of LEED Building Practices and Trainings. PLEASE REFERENCE ATTACHMENT E: CONSULTANT REPORTS –*LEED BUILDING PRACTICES AND TRAININGS.*

Leadership in Energy and Environmental Design (LEED) is a program created and governed by the U.S. Green Building Council (USGBC).

The USGBC is a national non-profit that promotes green building practices, technologies, policies, and standards. The Mission of the USGBC is "To transform the way buildings and communities are designed, built and operated, enabling an environmentally and socially responsible, healthy and prosperous environment that improves the quality of life."

LEED, is a voluntary, consensus-based national standard for developing high-performance, sustainable buildings of any type and in any building life-cycle phase. A definition of sustainability is, "Meeting the needs of the present without compromising the ability of future generations to meet their own needs."

The USGBC established LEED certification guidelines, the country's most commonly used rating system for green buildings. The council was founded in 1993 in Washington, D.C., and has chapters around the country.

Through the use of a points system buildings can achieve four levels of LEED Certifications. They are:

A. LEED Certified
B. LEED Silver
C. LEED Gold
D. LEED Platinum

LEED promotes a **whole-building approach** to sustainability by recognizing performance in key areas:

- Sustainable Sites
- Water Efficiency
- Energy & Atmosphere
- Materials & Resources

- Indoor Environmental Quality

LEED points are awarded on a 100-point scale, and credits are weighted to reflect their potential environmental impacts.

Following are some commonly used LEED terms and categories of identification:

LEED-NC: new commercial construction and major renovation projects
LEED-EB: existing building operations
LEED-CI: commercial interiors projects
LEED-CS: core and shell projects
LEED-H: homes
LEED-ND: neighborhood development
LEED-AP: an accredited professional, meaning someone who has passed an exam in LEED standards; there are currently more than 30,000 LEED APs in the U.S

While a LEED certified building may be Energy Efficient, not all Energy Efficient buildings are also LEED certified.

City of Flint Buildings and Facilities: Energy Efficiency and Conservation

Kate Fields of Advanced Solutions Group presented on the topic of COF Facilities IGAs and Consumers Rebates. PLEASE REFERENCE ATTACHMENT E: CONSULTANT REPORTS – *COF Facilities IGAs and Consumers Rebates.*

Investment Grade Energy Audits (IGAs), Conservation Measures, ESCO Financing and Consumers Energy Rebates – The COF owns and operates numerous buildings and facilities, none of which have had an examination or testing of energy efficiency. The age of the buildings vary with some constructed as early as 1924, up to a few which were built in the 1980s. According to city staff, none to very few, energy conservation measures have been implemented. Of the conservation measures,

most were retrofitting of Fluorescent Bulbs (T12s) with CFLs (T8s). It was not specified which facilities or parts of facilities this occurred at.

UTILITY COSTS AND PAYMENTS

The cost of utilities is continually rising.

- In 2008, the COF paid Consumers Energy a total of $4,873,676. Of that total, $2,293,314 was for Traffic and Street Lighting, and $2,581.362 was for all other gas and electric accounts.
- In 2009, the COF paid Consumers Energy a total of $5,095,006. Of that total, $2,486,892 was for Traffic and Street Lighting, and $2,608,114 was for all other gas and electric accounts.
- The difference between 2008 and 2009 utilities cost is an **increase of $221,330.**
- It is expected that the costs of energy will again increase in 2010.

There is a great discrepancy between the number of buildings the city purports to own and operate—and the number of individual Consumer Energy accounts and discrete utility bills that the city pays each month:

- Consultants were provided with a spreadsheet of city owned and operated buildings. This list had forty (40) properties included. It's not clear whether all the buildings are actually in operation (or winterized if non-operational), nor is it clear whether the city pays utility bills on all of these properties.
- It is not clear whether buildings that the city rents or leases (and pays the utilities), were included in this list.
- Consumers Energy provided a spreadsheet and history of all accounts that the city pays for. **There are one-hundred and forty-seven (147) of these accounts yet the city claims to operate 40 properties.**
  - It's not clear whether the city's Traffic and Street Lights bills and accounts are included in the (Consumers Energy provided) spreadsheet. The city

also provided separate spreadsheets and reports on just Traffic and Street Lights.

- Some of these Consumers Energy accounts may be for Traffic and Street Lights but the majority of the accounts have an address associated with the account.
- Some addresses had more than one account so it is possible that some facilities have more than one meter.
- Some accounts are most probably for sites like Sewage Pumping Stations that may not appear separately in the city's inventory of properties owned and operated.

INVESTMENT GRADE ENERGY AUDITS

In simplification, an energy audit is the process of determining the energy consumption of a building or facility. You have to know the particulars of your energy consumption in order to determine how to reduce that consumption, which at the bottom line means to reduce your costs.

The term energy audit is commonly used to describe a broad spectrum of energy studies ranging from a quick walk-through of a facility to identify major problem areas to a comprehensive analysis of the implications of alternative energy efficiency measures sufficient to satisfy the financial criteria of sophisticated investors (e.g., Energy Service Companies). Three common audit programs are:

A. **Preliminary Audit** - The preliminary audit (alternatively called a simple audit, screening audit or walk-through audit) is the simplest and quickest type of audit. It involves minimal interviews with site-operating personnel, a brief review of facility utility bills and other operating data, and a walk-through of the facility to become familiar with the building operation and to identify any glaring areas of energy waste or inefficiency.

B. **General Audit** - The general audit (alternatively called a mini-audit, site energy audit or detailed energy audit or complete site energy audit) expands on the preliminary audit described above by collecting more detailed

information about facility operation and by performing a more detailed evaluation of energy conservation measures. Utility bills are collected for a 12 to 36 month period to allow the auditor to evaluate the facility's energy/demand rate structures and energy usage profiles.

C. **Investment Grade Energy Audit (IGA)** - The investment-grade audit (alternatively called a comprehensive audit, detailed audit, maxi audit, or technical analysis audit) expands on the general audit by providing a dynamic model of energy-use characteristics of both the existing facility and all energy conservation measures identified. The building model is calibrated against actual utility data to provide a realistic baseline against which to compute operating savings for proposed measures. Extensive attention is given to understanding not only the operating characteristics of all energy consuming systems, but also situations that cause load profile variations on short and longer term bases (e.g. daily, weekly, monthly, annual). Existing utility data is supplemented with sub-metering of major energy consuming systems and monitoring of system operating characteristics.

Several years ago the COF participated in a State of Michigan program called, Rebuild Michigan. This program provided a free service for the most minimal type of audit, the Preliminary Audit. Unfortunately, the final report was never completed. When asked why, the auditor said the city failed to provide the information needed to complete the report. Since a significant measure of time has passed since then, it’s unlikely that this report would be of current value.

Investment Grade Energy Audits (and the resulting recommended Conservation Measures) are expensive, but they merit the effort due to the resulting energy and cost savings which can be from 15% to 60% of the current non-energy efficient structures. For example, the Consumers Energy spreadsheet associates two account numbers with the main City Hall address of 1101 S. Saginaw. These two accounts summed for a year is $395,808 for utility costs for <u>one</u> building. Given the spread of potential energy cost savings of 15% to 60%

the **COF could potentially save $59,371 to $237,485 per year on utility bills** for one building.

The DOE EECBG grant is not sufficient for COF IGAs and the resulting Conservation Measures, but there are other ways to finance these activities, such as the use of an Energy Service Company (ESCO).

ESCOs and Energy Performance Contracts

The following information is taken from the National Association of Energy Service Companies web site:

What is an ESCO?

An ESCO, or Energy Service Company, is a business that develops, installs, and arranges financing for projects designed to improve the energy efficiency and maintenance costs for facilities over a seven to twenty year time period. ESCOs generally act as project developers for a wide range of tasks and assume the technical and performance risk associated with the project. Typically, they offer the following services:

- *develop, design, and arrange financing for energy efficiency projects;*
- *install and maintain the energy efficient equipment involved;*
- *measure, monitor, and verify the project's energy savings; and*
- *assume the risk that the project will save the amount of energy guaranteed.*

These services are bundled into the project's cost and are repaid through the dollar savings generated.

ESCO projects are comprehensive, which means that the ESCO employs a wide array of cost-effective measures to achieve energy savings. These measures often include the following: high efficiency lighting, high efficiency heating and air

conditioning, efficient motors and variable speed drives, and centralized energy management systems.

What sets ESCOs apart from other firms that offer energy efficiency, like consulting firms and equipment contractors, is the concept of performance-based contracting. When an ESCO undertakes a project, the company's compensation, and often the project's financing, are directly linked to the amount of energy that is actually saved.

Typically, the comprehensive energy efficiency retrofits inherent in ESCO projects require a large initial capital investment and offer a relatively long payback period. ***The customer's debt payments are tied to the energy savings offered under the project so that the customer pays for the capital improvement with the money that comes out of the difference between pre-installation and post-installation energy use and other costs.*** *For this reason, ESCOs have led the effort to verify, rather than estimate energy savings. One of the most accurate means of measurement is the relatively new practice of metering, which is direct tracking of energy savings according to sanctioned engineering protocols.*

Most performance-based energy efficiency projects include the maintenance of all or some portion of the new high-energy equipment over the life of the contract. The cost of this ongoing maintenance is folded into the overall cost of the project. Therefore, during the life of the contract, the customer receives the benefit of reduced maintenance costs, in addition to reduced energy costs. As an additional service in most contracts, the ESCO provides any specialized training needed so that the customer's maintenance staff can take over at the end of the contract period.

Another critical component of every energy efficiency projects is the education of customers about their own energy use patterns in order to develop an "energy efficiency partnership" between the ESCO and the customer. A primary purpose

of this partnership is to help the customer understand how their energy use is related to the business that they conduct.

Included in the ancillary services provided in a typical performance-based energy efficiency contract are the removal and disposal of hazardous materials from the customer's facility. When, for example, existing fluorescent lighting equipment, ballasts that contain PCBs, and fluorescent light tubes that contain traces of mercury are replaced, the old equipment must be disposed of as hazardous waste. Upgrades to heating, air conditioning, and ventilation systems may involve the removal of asbestos and would also be properly disposed of by the ESCO.

In addition to the economic benefits realized by ESCO customers through energy and maintenance cost savings, this booming industry has had a profound effect on the U.S. economy. New jobs have been created, not only within the ESCOs, but though the use of contractors and through the many firms involved directly and indirectly in supporting energy efficiency projects. Since approximately one third of the money invested in ESCO projects is applied to labor costs, out of the estimated $20 billion of projects installed to date, approximately $7 billion has gone directly for labor employment. (http://www.naesco.org/resources/esco.htm)

[NOTE – A beneficial contract condition could be the ESCOs utilization of local Flint Contractors.]

One difficulty the COF may face is the fact that a municipality's credit rating may affect the ability to obtain ESCO financing. The COF does not currently have a good credit rating.

Additional questions the city will have to answer are:

- Which facilities would have IGAs? Some, or all?
- How much retrofitting would be city be willing to do? This affects the ESCO pay-back period and the length of time before the city would realize cash/general fund savings for the energy conservation efforts.

- Could the city obtain grants to help pay for conservation measures and shorten the pay-back period of an ESCO Energy Performance Contract?

CONSUMERS ENERGY REBATES

There are additional financial incentives available for energy efficiency and conservation. The City of Flint's utility provider is Consumers Energy. The city would be eligible for the rebate programs offered through Consumers. They provide a (downloadable) 2010 Program Year Policies and Procedure Manual which explains the specifics of the program but following are key elements:

- There is a finite amount of rebate funds every year. A customer must reserve (and have accepted) the amount of money they wish to claim.
- The Rebate is an actual cash payment for (approved) energy efficient improvements.
- The COF could receive a maximum of $100,000 per facility rebate and a maximum of $500,000 in total.

The Policies and Procedures Manual, can be found at
http://www.consumersenergy.com/eeprograms/Landing.aspx?ID=750
More specifics on the types of incentives for businesses, per a specific activity, can be found on the Consumers Energy web site
http://www.consumersenergy.com/eeprograms/Landing.aspx?ID=750

[NOTE – Consumers Energy Residential Rebates can be found at
http://www.consumersenergy.com/eeprograms/Landing.aspx?ID=793]

Building Automation for City of Flint Buildings and Facilities

Dr. Juan Pimentel of AltEnergy presented the topic of Building Automation.
PLEASE REFERENCE ATTACHMENT E: CONSULTANT REPORTS –*BUILDING AUTOMATION.*

Building Automation Systems (BAS) are simply computer based systems which help monitor and control the mechanical, lighting and other electrical equipment (such as Information Technology) in a building.

- The purpose is to provide energy savings and optimization of energy use.
- The control system is a computerized, intelligent network of electronic devices.
- The BAS functionality reduces building energy and maintenance costs when compared to non-controlled buildings.

The main benefits of a BAS are:

- Lower energy usage
- Optimization of energy usage
- Security and privacy
- Control over energy resources
- Control of operating conditions:
  - humidity
  - air volume
  - temperature

Currently, COF facilities do not have any type of control system. Energy (and energy costs) is wasted for the following reasons:

- Most lights are left on
  - 24 hours per day, seven days a week, whether any facility is open or not and whether there are any staff members present and working, or not.
  - In rooms and areas where there are no occupants using those rooms and areas.
  - And most city lighting does not meet energy efficient specifications or criteria.
- Heating and cooling systems
  - Are not programmable and therefore are not adjusted for lower output and temperatures during non-operational time periods.

- Are not effective, nor efficient. In cold weather, many zones within city facilities are tropical, while other areas do not have sufficient heat. The reverse is true during warm weather. There is wide-spread use at City Hall of portable electric heaters and fans to make individual work zones more comfortable. In some rooms of city facilities you can observe windows deliberately left open, in the dead of winter, while the heating system remains on.
- And equipment do not meet energy efficient specifications or criteria.

- Non-operational city facilities are not "powered down" or winterized to reflect their non-operational status.
- Information Technology Equipment (ITE) and Systems
  - Do not have automatic "sleep mode" capabilities or "off" programming for hours of non-operation.
  - Are never turned off, even when not in use.
  - Are not inventoried completely (the IT department does not service or keep track of ITE inventories at City Community Centers)
  - Are not inventoried accurately (the ITS department provided numerical inventory spreadsheets and narrative which were not in agreement with each other).

A Building Automation System in City Facilities would help reduce energy usage and reduce costs. **Saving 1kw of electrical consumption** in Information Technology alone (based on the cost of $0.12 per kwh) **would save the city $4,326 annually and $43,260 over a ten year period.**

Renewable Energy Generation

Dr. Juan Pimentel of AltEnergy presented the topic of Renewable Energy Generation. PLEASE REFERENCE ATTACHMENT E: CONSULTANT REPORTS –*RENEWABLE ENERGY GENERATION.*

Renewable Energy is the generation of energy from sources that are considered infinite in energy for practical purposes:

- Solar Photovoltaics (PVs)
- Solar Thermal
- Wind
- Geothermal
- Hydrodynamic
- Bio-mass

Currently the city's only connection to a renewable energy project is it's involvement in a partnership with a Swedish biogas firm to produce biogas from the city's wastewater treatment plant.

Dr. Juan Pimentel's full report to the city thoroughly covered all aspects of the categories of renewable energy. In this report, Dr. Pimentel provided a recommendation of the most viable category (Solar Photovoltaics) for the city, as an entity. [NOTE – While Wind Power is a possibility, the wind speeds in Flint are not sufficient for optimal energy production.] See (below) Dr. Pimentel's comments on renewable energy for the COF:

> ***Which systems make the most sense for the City of Flint****?*
> *A. Alone or in partnership with surrounding communities*
> *B. Incentives to help reduce investment and payback period*
>
> *The bottom line is that there is no clear cut answer as to what makes the most sense for the city of Flint as all renewable energy solutions require subsidies to be economically feasible. Biomass requires extensive land, so this is a technology perhaps suitable for a partnership of several surrounding communities. An important factor deciding what makes the most sense for a city such as Flint is the available, or easy to obtain, subsidies. Based on their scalability and incentives from the Federal Government, the two systems that*

make the most sense for the City of Flint are wind and solar PV. Solar thermal makes currently the most sense for residential customers. The resources and incentives for geothermal and bio-mass energy in the U.S. are not as significant as those for solar and wind, thus it currently does not much sense for the city of Flint. Hydro-dynamic energy is extracted from oceans and lakes and requires much larger investments that are not currently recommended for the COF. Due to the young nature of the deployment of solar PV and wind across the country, it makes sense for the city of Flint do these projects alone initially. Later on, based on the experiences gained and additional investment opportunities, it will make sense to involve surrounding communities in a partnership arrangement.

The main barrier to widespread adoption of solar and wind technology is the investment needed and the long payback period. However, these barriers are expected to diminish with time, so it is a good idea to start experimenting with these technologies for greater future benefits. Actual, detailed incentives depend on the energy source. In addition to energy tax credits, other existing initiatives are Renewable Energy Bonds. Appendix A details such bonds.

In Michigan, there is the feed-in tariff incentive initiative (not yet approved) from Consumers Energy which is similar to that in Germany. Consumers Energy has proposed a feed-in-tariff, similar to what was recently enacted in Gainesville, Florida to spur on more interest in solar. If you're new to what feed-in tariff's are, basically the utility pays YOU significantly more for the electricity you feed back into the grid with solar than the going rate for electricity. The Consumer's Energy proposal is for $0.65/kwh! This is a substantial sum, when you consider the average price per kwh in the state is $0.11.

Here are some added details:

- *Solar PV only*
- *Program cap 2 MW (500 kW reserved for residential customers) (Not an annual cap but a total program cap)*

- *Project cap 150 kW*
- *Project minimum: commercial 20 kW, residential 1 kW*
- *50%-60% Michigan Content Requirement (can be labor added)*
- *12 year contracts*
- *$25/month service charge*
- *2009 Tariffs*
    - *Residential: $0.65/kWh*
    - *Commercial: $0.45/kWh*
- *2010 Tariffs*
    - *Residential: $0.525/kWh*
    - *Commercial: $0.375/kWh*

I.2. System consulting, design, and installation: Solar PV

There is literally too much information that could be included in a report such as this one on design and installation of renewable energy systems, so we will concentrate on solar photovoltaics (PV). The main advantage of solar PV is that the energy sensitivity is the greatest, it provides more voltage per sun intensity. The Department of Energy (DOE), and more specifically the National Renewable Energy Laboratory (NREL) are the biggest and best promoters of solar PV in the U.S. The DOE supports the idea that new designs should use the so-called Advanced Distribution Infrastructure configuration of the Solar Energy Grid Integration Systems and shown in Fig. 1. Although SEGIS was specifically developed for solar energy, and is compatible with the Smart Grid, it can be used with any renewable energy source (e.g., wind, bio-mass, etc.). Basically, SEGIS enables an array of PVs to sell energy back to the utility or to store it locally on an "Energy Storage" while serving several protected smart, critical, and regular loads. The Internet connection and value information flow supports the Smart Grid concept. All of the above is made possible by a smart Systems Control sub-system that includes the power electronics and an Energy Management System (EMS). In section V below, we provide a preliminary design of a PV array for the city of Flint main office facilities. Appendix B details power system design considerations when PV arrays are used.

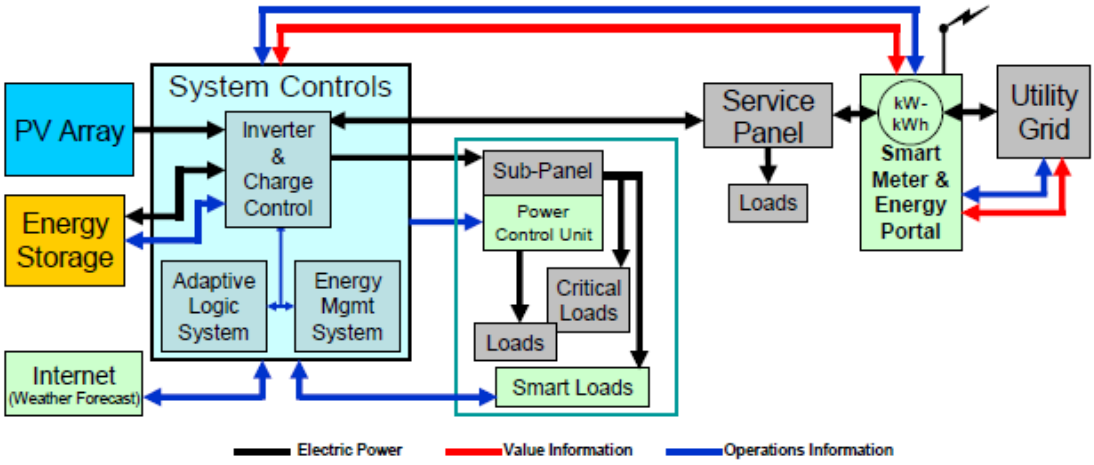

Figure 1. SEGIS Advanced Distribution Infrastructure Configuration

SOLAR FOR FLINT CITY HALL

A major factor in the decision to implement a renewable energy technology depends on the cost of those implementation activities, and the pay-back period which is commonly referred to as Return on Investment, or ROI. While there may be the desire to be "Green" and to reduce greenhouse gases (and energy costs) through the utilization of renewable energy technologies, the bottom line, or cost, of this implementation usually takes priority consideration.

Dr. Pimentel designed a (sample) 17kWp Solar Photovoltaic System (PV) for the city which assumed:

- A size smaller than the total required for the energy production of the main City Hall Building (the average power consumption is about 230,000 kW and the specified system is 21 kW).
- The system designed is estimated to be at a cost of $100,000 (using a price of current PV installations at $4.80 per watt. For 21 kW = $100,000).

Preliminary design and specifications of Solar PV array for the Main City Hall.

PV System Description

The system consists of a series of PV panel with a total capacity of 17 kWp PV to be installed on the roof of the main city hall. The DC system output from the PV arrays are connected to three inverters located about 30 feet from the arrays, and three-phase 480 V AC power provided by the inverters is to be tied to the main electrical room of the building. The AC power goes through a production meter, an AC disconnect switch, and then tie into the main panel. The system has no reverse power relay, nor any dynamically controlled inverters. The simplified electrical one-line diagram is shown in Exhibit 1.

We assume that Consumers Energy, the utility provider, serves customers in the city hall area at 480 volt, three-phase power and does not require a reverse power relay protection for this PV system. The network has the following characteristics:

- *A multi-transformer, multi-feeder area network (hundreds of transformers)*
- *Each transformer is rated at 13.2 kV/480 V*
- *Each transformer has a network protector (some network protectors have been converted to microprocessor based units)*
- *Network protectors are monitored via power line carrier to the substation, then on fiber optic line to the SCADA host computer.*

This system is considered to be a small-sized PV system, to generate approximately 21 MWh of energy per year (assuming that the AC power output of the PV system is approximately 13 kWp AC, i.e., an efficiency factor of about 18.44%). The minimum demand for the building, during daytime hours, is significantly higher than the AC power output. The system is not designed with any reverse power relay equipment nor any dynamic inverter controller. However, the energy produced by the PV system is considerably less than the daytime energy consumed at the building during the work week. The load during

the weekend has the potential of dropping below the output of the PV system, and thus this system may export power through the utility meter back toward the area network.

EXHIBIT 1.

PV Design: Main City Hall

17 kWp system

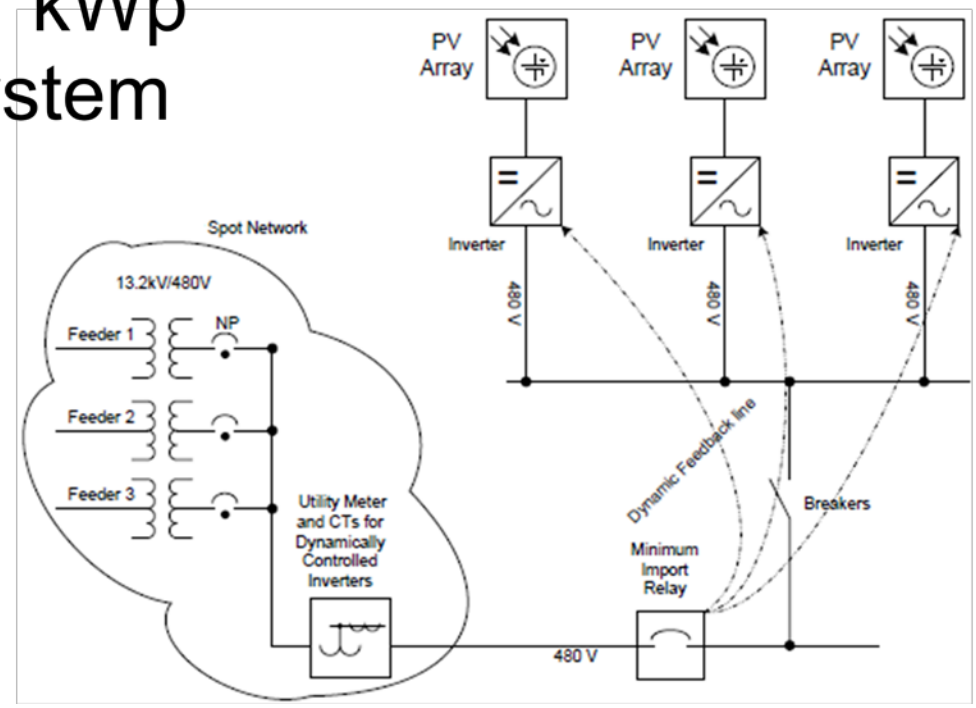

The proposed PV system is not expected to cause any known problems to Consumers Energy network system, but it is believed that the system generates a small enough amount of energy that it is likely that all generated energy is consumed within the building. However, it is possible for the system to export surplus energy to the network on weekends during the hours of 10 AM - 2 PM.

Dr. Pimentel then calculated the ROI based on several scenarios:

- Without subsidy funds
- With subsidy funds
- With subsidy funds and a Feed-In-Tariff

Return on Investment

This system is considered to be a small-sized PV system, to generate approximately 21 MWh of energy per year (assuming that the AC power output of the PV system is approximately 13 kW AC, i.e., an efficiency factor of about 18.44%). Assuming a cost of 11c/kWh, this is a savings of $ 2,310/year. The cost of a 17 kW PV array (with electronics, wiring, etc) is approximately $ 100,000. So the worst case ROI is 43.29 years, assuming no grants, energy taxes, no feed-in tariffs, or bonds. Obviously, unless incentives are not obtained, investing in solar PVs for medium size buildings are not justified.

As noted, solar PV is currently economically feasible if subsidies or other incentives (e.g., feed in tariffs from the Utilities) are available. Exhibit 2 lists several scenarios on the return on investment (ROI) ranging from no subsidies nor tariffs to an almost ideal situation where a large subsidy is found in conjunction with an attractive feed-in tariff from the Utilities. Taking into account all of these variables, the ROI ranges from 43.29 (worst case) to 3.66 (best case) scenario.(See Exhibit 2.)

EXHIBIT 2

PV Design: Main City Hall

17 kWp system ROI

Subsidies	Feed In Tariff (Utilities)	Return on Investment (ROI)
--	--	43.29 Years
--	$ 0.37/kWh	12.87 Years
--	$ 0.65/kWh	7.32 Years
$ 25,000.00	--	32.46 Years
$ 50,000.00	--	12.87 Years
$ 50,000.00	$ 0.65/kWh	3.66 Years

It's clear that a PV system for the city is not currently an economically viable choice without securing subsidies.

Renewable Energy Ordinances (for Zoning, Building, and Land Use Planning)

Attorney Kevin Lavalle of Gault and Davison P.C. presented the topic of Renewable Energy Ordinances. PLEASE REFERENCE ATTACHMENT E: CONSULTANT REPORTS – *RENEWABLE ENERGY ORDINANCES.*

Renewable Energy Technologies are increasingly being utilized around the World, in the U.S. and in our State of Michigan. Codes, Ordinances and Land Use Planning must keep pace with new developments.

WHY DOES FLINT NEED ORDINANCES FOR RENEWABLE ENERGY TECHNOLOGIES?

Currently, the COF has not established any particular or specific ordinances that address the presence, installation, maintenance or use of Renewable Energy Technologies.

First, it's of value to review the reasons why municipalities utilize Zoning and Building Ordinances, as well as Land Use Planning:

A. Zoning

Zoning is a device of land use regulation used by local governments. The word is derived from the practice of designating permitted uses of land based on mapped zones which separate one set of land uses from another. Zoning may be use-based (regulating the uses to which land may be put), or it may regulate building height, lot coverage, and similar characteristics, or some combination of these.

While Zoning is commonly controlled by local governments such as counties or municipalities, the nature of Zoning may be determined or limited by state or national planning authorities, or through enabling legislation.

Zoning may include regulation of the kinds of activities which will be acceptable on particular lots (such as open space, residential, agricultural, commercial or industrial), the densities at which those activities can be performed (from low-density housing such as single family homes to high-density high-rise apartment buildings), the height of buildings, the amount of space structures may occupy, the location of a building on the lot (setbacks), the proportions of the types of space on a lot, such as how much landscaped space, impervious surface, traffic lanes and parking must be provided. In Germany, zoning usually includes building design, very specific greenspace and compensation regulations. Most Zoning systems have a procedure for granting variances (exceptions to the Zoning rules) usually because of some perceived hardship caused by the particular nature of the property in question.

Basically, urban zones fall into one of five major categories: residential, mixed residential-commercial, commercial, industrial and special (e.g. power plants, sports complexes, airports, shopping malls, etc.). Each category can have a number of sub-categories.

B. Building Codes

Building Codes govern the safety and structure of buildings, they do not contradict Zoning ordinances, but exist side by side with them. Zoning stabilizes the use of property and building codes ensure the safety and structure of buildings. Zoning is intended to have a relative permanency, whereas Building Codes are much more flexible because they must keep abreast of new materials and other technological advances.

C. Land Use Planning

Land Use Planning is the term used for a branch of public policy which encompasses disciplines which seek to order and regulate the use of land in an efficient way, thus preventing land use conflicts and providing a methodical, intended, development of a geographic area.

A definition offered by the Canadian Institute of Planners says,
"*Land use planning means the scientific, aesthetic, and orderly disposition of land, resources, facilities and services with a view to securing the physical, economic and social efficiency, health and well-being of urban and rural communities.*"

In most developed countries, land use planning is an important part of social policy, ensuring that land is used efficiently for the benefit of the wider economy and population as well as to protect the environment.

It's imperative that the COF provide the leadership for our emerging "Green" economy and community development by providing zoning, building and planning ordinances for local Renewable Energy technologies and activities.

Attorney Kevin Lavalle (Gault & Davison P.C.) prepared a comprehensive report on Renewable Energy and considerations for energy ordinances pertaining to Renewable Energy Technologies in the COF:

In October 2008, the State of Michigan enacted the Clean, Renewable and Efficient Energy Act, MCL 460.1001. This Act had four stated purposes:

1) Diversify resources to reliably meet the energy needs of State residents,
2) Provide greater energy security through the use of indigenous energy resources available within the State,
3) Encourage private investment in renewable energy and energy efficiency, and
4) Provide improved air quality and other benefits to energy customers and citizens of this State.

As previously explained, this act also set Renewable Energy Portfolio Standards for the state, which requires Michigan electric providers to generate 10% of their retail electricity sales from renewable energy sources by 2015.

The amount of electricity generated from renewable energy sources has been on the increase. The amount of solar systems being installed in Michigan began to rise in 1996 and has continued to increase. Exhibit 3 (below) indicates the cumulative kilowatts of solar produced power that have been installed as of the end of 2008(734 kW).

EXHIBIT 3.

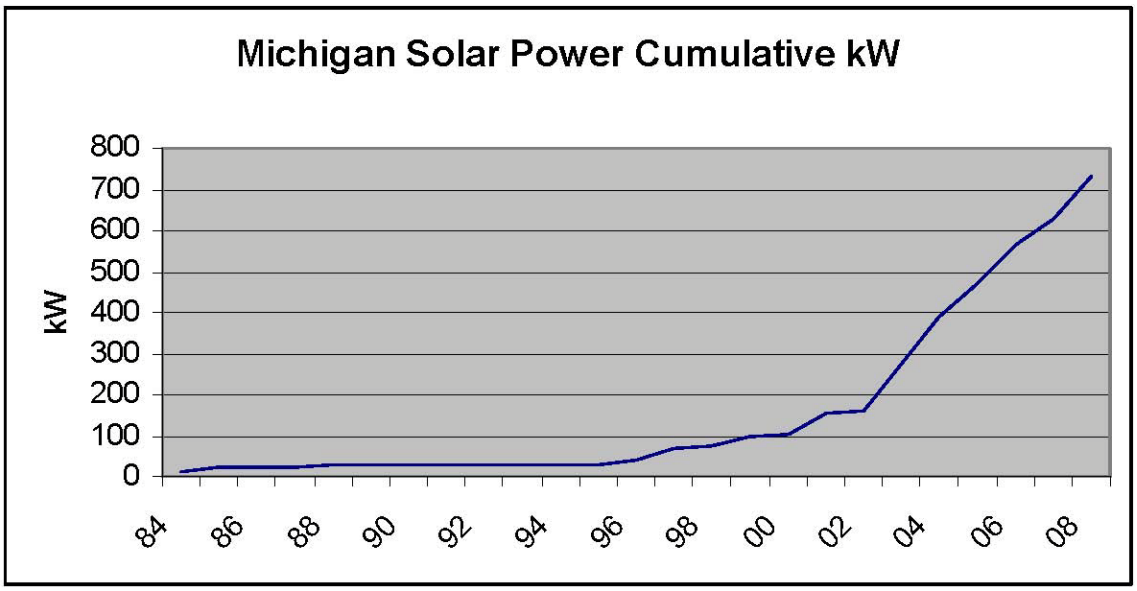

The same trend is applicable to electricity generated using wind energy systems. Exhibit 4.(below) indicates that 130 MW of wind power has been installed in Michigan as of the end of 2008.

EXHIBIT 4.

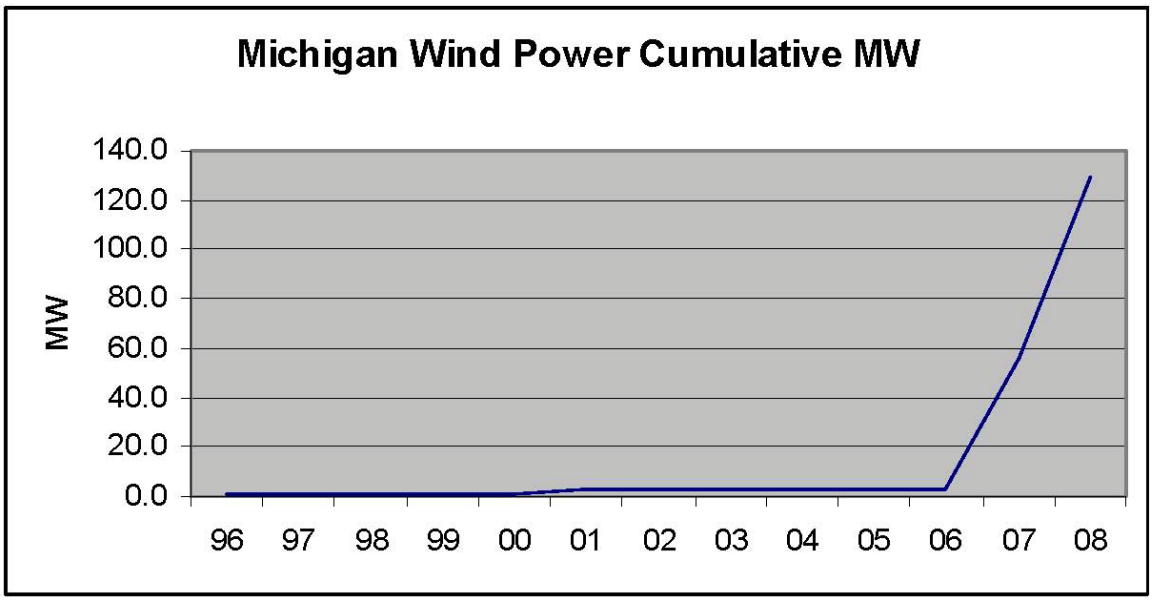

The amount of wind driven energy systems is expected to increase dramatically in the upcoming years as is shown in Exhibit 5.below.

EXHIBIT 5

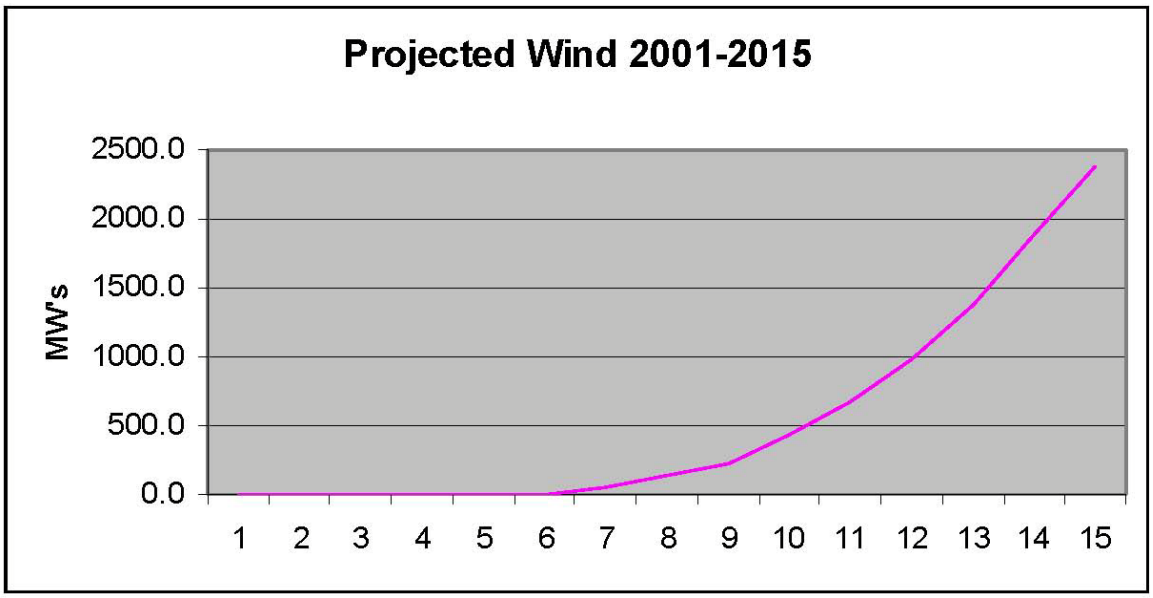

WHY RENEWABLES?

The generation of electricity is responsible for 1) 36% of all carbon dioxide pollution, 2) 64% of all sulfur dioxide pollution, 3) 26% of all nitrogen dioxide pollution and 4) 34% of all mercury pollution. Electricity generated from clean renewable resource reduces air pollution, increases fuel diversity, saves natural resources and provides a hedge against increases in the price of fossil fuels used to generate electricity. It is estimated that construction of 1,000 megawatts of new wind power in Michigan would result in a carbon dioxide reduction of 2.9 million tons every year.

Building renewable energy systems have substantial economic benefits a well. It is estimated that the cumulative economic benefit from construction of 1000 MW of new wind energy systems in Michigan would total $1.3 billion dollars. Included

in this amount are $18.6 million dollars in new local property tax revenues, 2,830 construction jobs and 507 long-term jobs.

Currently, we have a complete absence of any Zoning, Building and/or Land Use policies/ordinances for Renewable Technologies in Flint. In this absence, does this mean that the city has no control over installation, or use of, Solar, Wind, Geothermal, Biomass, etc. that someone (residential and/or business) could deploy in our municipality? This is not a legal opinion, but common sense would declaim the answer to be – YES! Common Sense would also tell us that if the city would like to be a participant in a Green Economy, and if they would like to back their claim of "becoming a sustainable city" – these are among the first steps that the city must take.

Alternative Fuels (AF)

Alternative Fuels is the topic explored for Flint by Dr. Lawrence Oswald, of Pure Eco Environmental Solutions Inc. PLEASE REFERENCE ATTACHMENT E: CONSULTANT REPORTS –*ALTERNATIVE FUELS.*

This topic is relevant and important for the city to understand because it effects:

A. The fuels and vehicles the city chooses to purchase and utilize.
B. The expenditure costs of the fuels and vehicles the city utilizes.
C. The Green Economic Development ventures the city may engage in.
D. The current COF partnership with Swedish Biogas.
E. The potential revenue the city may generate through the proposed (see item 15) Materials Recovery and Waste Disposal project.

FIVE REASONS WHY ALTERNATIVE FUELS ARE IMPORTANT TO THE COF

Dr. Lawrence gave five reasons why Alternative Fuels should be considered important by the COF:

1) Federal subsidies are available through DOT, DOE and EPA programs for potentially reducing the cost of fuels for operating Flint's transportation and service vehicles
2) Use provides environmental benefits as a result of less harmful tailpipe emissions
3) Provides improved national security by reducing the amount of petroleum that must be imported into the U.S
4) Demonstrates to the citizens of Flint that their city "is doing its part for the environment and national security"
5) Sets an example for the citizens of Flint to follow which, in turn, provides additional environmental and national security benefits for all

Dr. Lawrence defined AF as, "Alternative fuels are anything other than today's common petroleum-based fuels (gasoline and diesel) that are readily available for purchase and whose properties are standardized and controlled in order to avoid issues with its use."

His report discussed the following important Alternative Fuels as being suitable for possible future use by COF:

- Ethanol
- Bio-diesel
- Natural Gas
- Propane
- Hydrogen

KEY INFORMATION – COF AND AF

Key information on this topic was secured from city officials.

- The COF Transportation Department does not know of any AF procured for use in any COF vehicles.

- Some Police vehicles are “Flex Fuel” capable and could be fueled by E85, but no record of E85 use.
- The COF does not have an E85 (or any other alternative fuel) pumping station.
- In the last 12 months, COF Transportation Department purchased 254,722 gallons of diesel fuel and 280,586 gallons of unleaded gasoline at a cost of $1,211,020.62

AF Recommendations for COF

Dr. Lawrence specifically recommended that the COF should take the following steps:

- E85 capable Police vehicles should be run with E85 immediately
  - Slightly inconvenient to fill because of no COF pumps
  - Sets right example with no cost penalty
- Replace cars and L-D trucks with Flex-Fuel capable vehicles
- Eventually, install E85 pumps
  - E85 will stay with us for a long time
  - As production of non-food feedstock E85 comes on stream, price will fall
- Diesel-powered vehicles (plow, dump, garbage, fire trucks and school buses, etc) should switch to B20 bio-diesel
- Seek incentive money from grants to pay for the switch to B20 bio-diesel
- Seek grants to retrofit or buy new service vehicles with spark ignition engines to propane (Potential savings: 15% of cost of unleaded gasoline or about $35,000 savings)
- Investigate whether Natural Gas exists in deep pockets under COF owned land.

Traffic and Street Lighting

Traffic and Street Lighting retrofits to LED lighting was explored by Dr. Juan Pimentel of AltEnergy. PLEASE REFERENCE ATTACHMENT E: CONSULTANT REPORTS – *TRAFFIC AND STREET LIGHTING.* Dr. Pimentel provided an analysis of the city's current Traffic and Street Lighting conditions, and costs. He discovered:

CURRENT COF SITUATION WITH TRAFFIC AND STREET LIGHTING AND COSTS

- The COF currently owns the Traffic Lights, but Consumers Energy owns the Street Lighting.
- All utilities used by the COF <u>with the exception of</u> Traffic and Street Lighting, are charged at rates regulated by the Michigan Public Service Commission. Normally in the .10¢ to .11¢ per kwh range.
- Traffic and Street Light utility charges are predicated upon a negotiated contract with Consumers Energy.
- The original Consumers Energy contract was negotiated in 1977. There are 5-year automatic renewal clauses in the contract. If the COF doesn't negotiate, the contract automatically renews for another five years.
- The city is fast approaching the next renewal date (approximately June or July of 2010).
- The COF is currently paying Consumers about .28¢ per kwh for Traffic and Street Lighting. This expenditure rate includes the cost and clause that Consumers Energy provides the maintenance of the lighting fixtures.
- In 2008 the COF paid Consumers $4,873,676 for Traffic and Street Lights. In 2009 the COF paid them $5,095,006. This is an increase of $221,330 from 2008 to 2009. It is expected that Utility Costs will continue to rise.
- The COF and Consumers Energy are in disagreement about the total number of Street Lights in Flint. Consumers believes there are over 11,000 fixtures and the city believes there are approximately 9,000. Consumers Energy is currently conducting an inventory to verify the correct number of street lights.

Dr. Pimentel then provided recommendations and a cost analysis for retrofitting the city's Traffic and Street Lights with the more energy efficient LEDs. His findings included the following:

RECOMMENDATIONS FOR TRAFFIC AND STREET LIGHTING

- By retrofitting to LEDs the COF could lower their energy costs by $2,049,174 per year. These expenditures are paid out of the General Fund.
    - Reduced costs for LED Street Lighting = $1,824,396 per year
    - Reduced costs for LED Traffic Lights = $224,778 per year
- The cost of retrofitting would depend on several scenarios, including choice of total fixture replacement, or parts replacement.
- The COF would have to decide whether they wanted to own the new fixtures, or pay for the retrofitting of Consumers Energy-owned fixtures.
- An estimated cost for the project is $7M which would be financed by the manufacturers and repaid by the energy savings. Calculated Return on Investment is two years and nine months.
- The terms of the contract with Consumers Energy would have to be negotiated according to the elements which are changed and implemented:
    - Number of Fixtures
    - Fixtures retrofitted and/or replaced
    - Who has ownership of fixtures
    - Who will be doing maintenance of fixtures and system. Options are:
        - ✓ Consumers Energy
        - ✓ City of Flint In-House
        - ✓ City of Flint Outsourcing
- The new LED lighting would include automation (computer controlled) systems for greater energy efficiency.
- Retrofitting to LED Lighting would reduce COF Green House Gas Emissions by 11,136,372 Kg per year.

Alternative Transportation (AF)

Alternative Transportation was presented by Dr. Lawrence Oswald of Pure Eco Environmental Solutions. PLEASE REFERENCE ATTACHMENT E: CONSULTANT REPORTS – *ALTERNATIVE TRANSPORTATION.*

Dr. Oswald presented the following reasons why Alternative Transportation Vehicles (ATVs) should be important to the COF:

- Federal Government (DOT, DOE, DOC and ARRA) may subsidize initial purchase
- Their higher energy efficiency will save operating dollars
- ATVs are environmentally-friendly and emit fewer tailpipe emissions
- ATVs visibly demonstrates to COF citizens that the city "is up to date with advanced technology" and environmental awareness
- Sets an example for the citizens of Flint regarding their vehicle purchases

The definition of ATVs are, "Alternative Transportation Vehicles (ATVs) are cars, trucks, buses and other forms of transportation vehicles that use power trains other than common internal combustion (gasoline or diesel) engines." Examples include:

- Hybrid Electric (and a close cousin, hydraulic hybrid)
- Battery Electric and
- Fuel Cell

Detailed information regarding these types of ATVs may be found in Dr. Oswald's full report.

The COF's Fleet Manager provided a Fleet Inventory Spreadsheet and some narrative regarding the Fleet Inventory. It was discovered that there is a serious excess of vehicles that are not being utilized. Either the vehicles are older and have been replaced by new vehicles purchased during Mayor Williamson's administration, or due to staffing cutbacks, there are now more vehicles than there are city employees who use them. A prime example is the Flint Police Department. They

now have so many Chevy Tahoes (used by Patrol Officers) that their batteries die before they can be utilized. Dr. Oswald commented:

COMMENTS ON CURRENT COF FLEET INVENTORY

- Our research revealed many vehicles listed as "in service" are used very little or not at all. These vehicles require:
  - Resources (money and people) to maintain them
  - Large capital investment
- We recommend these vehicles be auctioned off (Recycled) and the proceeds be put to better use such as:
  - Placed in a fund to secure matching funds for the purchase of ATVs
  - Used to fund other improvements and programs for the COF

[NOTE – a request was made to the Department of Transportation for a list of vehicles and equipment being used, per department, at any one time, per shift, per employees available. Their response was an inventory of all vehicles and equipment per department, but it did not include the information regarding the number of employees per department that are available to use the vehicles and equipment.]

ADDITIONAL FLEET RECOMMENDATIONS

Additional recommendations made by Dr. Oswald include:

- COF should focus, in the nearer term, on the turnover of as many of its passenger cars and light duty trucks, replacing them with HEVs and BEVs
  - Provide transportation and cargo capacity to get 99% of the jobs completed while minimizing the amount of fuel (energy) consumed doing it
  - While these recommendation might seem impossible many cities in the United States, especially in California, are doing this with great success

- Specifically, passenger cars, pick-up trucks and SUVs should be replaced over time and as funding permits with HEVs that are manufactured and sold by Ford and General Motors
    - All of these HEVs are designed and built in the US and, in particular, in the state of Michigan
    - They are more expensive than their standard power train counterparts but there may be incentives to make them more affordable
    - Less expensive to operate
- Heavy Duty specialty vehicles are available from Freightliner and Navistar
- BEVs should be given careful consideration for the use in local transportation tasks such as:
    - The Police Department could use 2-passanger GEM NEV for parking enforcement and downtown patrolling
    - The Parks Department could use the GEM 2-passanger Long Bed Utility for light duty hauling and park maintenance chores.
    - GEM models are priced below $10,000 completely outfitted (without incentive money)

GEM 2-Passenger Police Version


GEM 2-passenger Long Bed Utility

The recommendations made by Pure Eco Environmental Solutions should be considered when the COF establishes Green Purchasing Policies. These policies should include both Alternative Fuels and Alternative Vehicles and both topics should be cross-referenced and synchronized with one another.

Materials Recovery and Waste Disposal

Materials Recovery and Waste Disposal was presented by Ryan Oswald and Dr. Lawrence Oswald of Pure Eco Environmental Solutions under the title of Recycling, Reuse and Energy Recovery. This report concentrates on all aspects of the city's Waste Disposal activities. PLEASE REFERENCE ATTACHMENT E: CONSULTANT REPORTS –*MATERIALS RECOVERY AND WASTE DISPOSAL.*

RATIONALE FOR BIG CHANGES IN CURRENT WASTE DISPOSAL PRACTICES

The main question posed was, "Why shouldn't the City of Flint derive value from the materials and energy in the solid waste (trash) collected from its Citizens?" The Oswalds explained:

- Today, COF pays to directly dump trash into landfills (cost to COF is about $4.5M per year)
- Landfills are cash-flow positive (for the owner of the landfill) because they:
  - Collect dumping and disposal fees
  - Then, they recover energy from the trash and sell it to local energy providers
- The Pure Eco presentation presents ways for COF to answer the above question
- It goes further and presents how the collection of solid waste can be integrated with other forms of collected waste in a complete COF-owned system for waste management
- The goal: Maximize financial value AND minimize what is sent to landfills
- Take a $4.5 M Cost Center and turn it into a $3M+ Profit Center

WASTE DISPOSAL AND ENERGY RECOVERY

Pertinent terms such as Recycling, Reuse and Energy Recovery were fully explained (Please reference full report). While all of these activities are integral to the discussion and final recommendations, Energy Recovery is the most

significant aspect of the dialogue for change—due to its potential for a COF Profit Center.

The Oswalds explained:
Energy Recovery is what you do to extract value from anything that cannot be recycled or reused in the collected solid waste. In the process of recovering energy, you minimize what is sent to landfills. There are several ways to recover energy, but the solid waste must first be separated into organic, inorganic, and hazardous waste.

- Organic Waste has energy extracted using anaerobic digestion
- Inorganic Waste has energy extracted by gasification or pyrolysis
- Hazardous Waste (which does NOT include medical waste) must be sent to an approved hazardous waste landfill

<u>Anaerobic Digestion</u>
Is the oxygen-starved bio-digestion of organic matter into methane and carbon dioxide gases plus sludge.

- Methane can be:
  - Used as fuel in an engine-generator system to generate electricity
  - and/or, sold to the local natural gas utility supplier for distribution through local natural gas pipelines
- Carbon Dioxide can be used in:
  - Various manufacturing processes
  - Carbonation of beverages
- Sludge can be:
  - A very rich fertilizer that can be sold to local landscape and agricultural growers, both for solid and liquid fertilizing

<u>Gasification or Pyrolysis</u>
Converts almost any inorganic material into solid, liquid and gas products

- Gas can be combusted to generate steam to run a steam turbine electricity generator
- Liquid can be refined into various hydrocarbon products
- Solid residue (char) can be further refined into products such as activated carbon

The Oswalds further examined the Current State of COF Waste Disposal:

COF Current Activities: Recycling

- Had a brief pilot program with curbside pickup
  - Comingled products had to be hand sorted
- Proved to be financially impractical because it did not collect enough materials relative to the expenses
- Converted to Recycling Centers around the COF where citizens can take items for recycling
- **No value is returned** to COF

COF Current Activities: Composting

- New project started in October 2009, lead by Resource Recycling Systems of Ann Arbor, to clean up and make practical the composting of leaves that the COF started collecting in mid-1990's
- Will establish a new composting site in the old "Chevy in the Hole" site and move leaves collected from Aldridge Park to this site. Will assist in further cleanup/remediation of the old Aldridge Park site.
- Composting of additional yard waste will also occur
- Expect that organic yard waste will be placed in row piles, 4'-5' tall and 10'-12' wide and several hundred feet long and rolled every 2-3 days to promote penetration of oxygen into the composting material
- Expected outcomes:
  - Hundreds of tons of very rich compost per year for COF use and/or selling

- Estimated value - $50 per dry ton

COF Current Activities: Bio-gas Plant at COF Wastewater Treatment Plant

- MEDC awarded $4 Million Grant through COF to Swedish Biogas International to design, build and operate a bio-gas plant
- Use COF waste water treatment plant's sewage sludge to generate mainly methane gas. Several possible uses of this gas include:
  - Generation of electricity using an engine-generator system
  - The methane fueling of COF transportation vehicles
  - Direct insertion of the methane into the local gas supplier's pipelines for distribution and sale to their customers
- Value TBD, but . . .
  - Assuming 25%of the plant yield, estimated to be 1.6 million cubic meters of methane per year, the return to the COF should be approximately $100,000 per year

Recommendations for a COF Solid Waste Program and Facility

The Oswalds made the following recommendations for a COF Solid Waste Management Program and Facility:

- Goal: Over the next 5 years, stop sending solid waste to private landfills
- Use Federal and State Grant money to fund the design and construction of a complete and comprehensive solid waste processing facility that would handle all solid wastes and return value to the COF
  - Recyclables would be compacted into batches of similar materials and sold to local companies. Local companies pay COF for value of materials
  - Reusables would be sorted and sent to a local "second hand store". The COF would receive a commission on sale
  - Organic and non-organic wastes would be batch processed using anaerobic digesters and pyrolysis equipment, respectively, into energy

- - electricity, methane gas, syngas and bi-products - - and value returned to COF

- Run Program and Facility as a <u>Profit Center</u>
  - Will take several years to be in a "net neutral" or possibly profit-making position
  - Grants should be used to fund construction so there is no mortgage to repay
  - Grants must be applied for on basis of energy efficiency and environmental-friendliness
  - Value returned from different "streams" will make the burden of solid waste collection and disposal much less than now
  - Currently COF spends $4.5 million per year for waste collection and disposal
    - ✓ $170,000 to Transfer Station
    - ✓ $530,000 to landfill for dumping fees
- Investments
  - Modify vehicles and equipment to be fueled with and run on methane
  - Federal grants available for conversions and/or purchase of new equipment
  - Hire and train people to operate the facility
  - Construction of Facility could be "phased" if required to go it alone
    - ✓ Step 1 – "Chevy in the Hole" composting
    - ✓ Step 2 - Setting up curbside recycling/reuse program including education of citizens, civic groups and leaders to educate citizens
      - – Comprehensive material separation strategy to prevent as much comingling as possible
      - – Include more materials like cooking oil, grease, engine and transmission oils
    - ✓ Step 3 (now!) - Identification of suitable site

GOING THE NEXT STEP: LINKING SOLID, LIQUID AND OTHER WASTE MANAGEMENT TOGETHER:

- More synergies to be gained by processing all waste streams in one comprehensive facility. Locate facility near Wastewater Treatment and Bio-gas Plant. See vision schematic on Exhibit 6.
    - Share process equipment:
        - ✓ For example: Engine-generator systems can run on a variety of gases
    - Share sorting and storage space
        - ✓ . . . share the "mission"
- Specific Example: Wet organic matter in solid waste could be added to the sewage sludge to enhance the bio-gas production
    - The bio-gas generator planned for the COF WWTP's sewerage sludge has capacity for about double that provided by the COF WWTP
    - The anaerobic digester for treating wet organic solids is almost identical to that for processing sewage sludge
- **Bottom Line: Consideration should be given now to creating a complete and comprehensive waste management facility that handles ALL of the current and potential waste streams. <u>Jobs</u> are created, energy is recovered, greenhouse gas emissions are reduced and what was once a Cost Center for the COF now becomes a PROFIT CENTER.**

EXHIBIT 6.

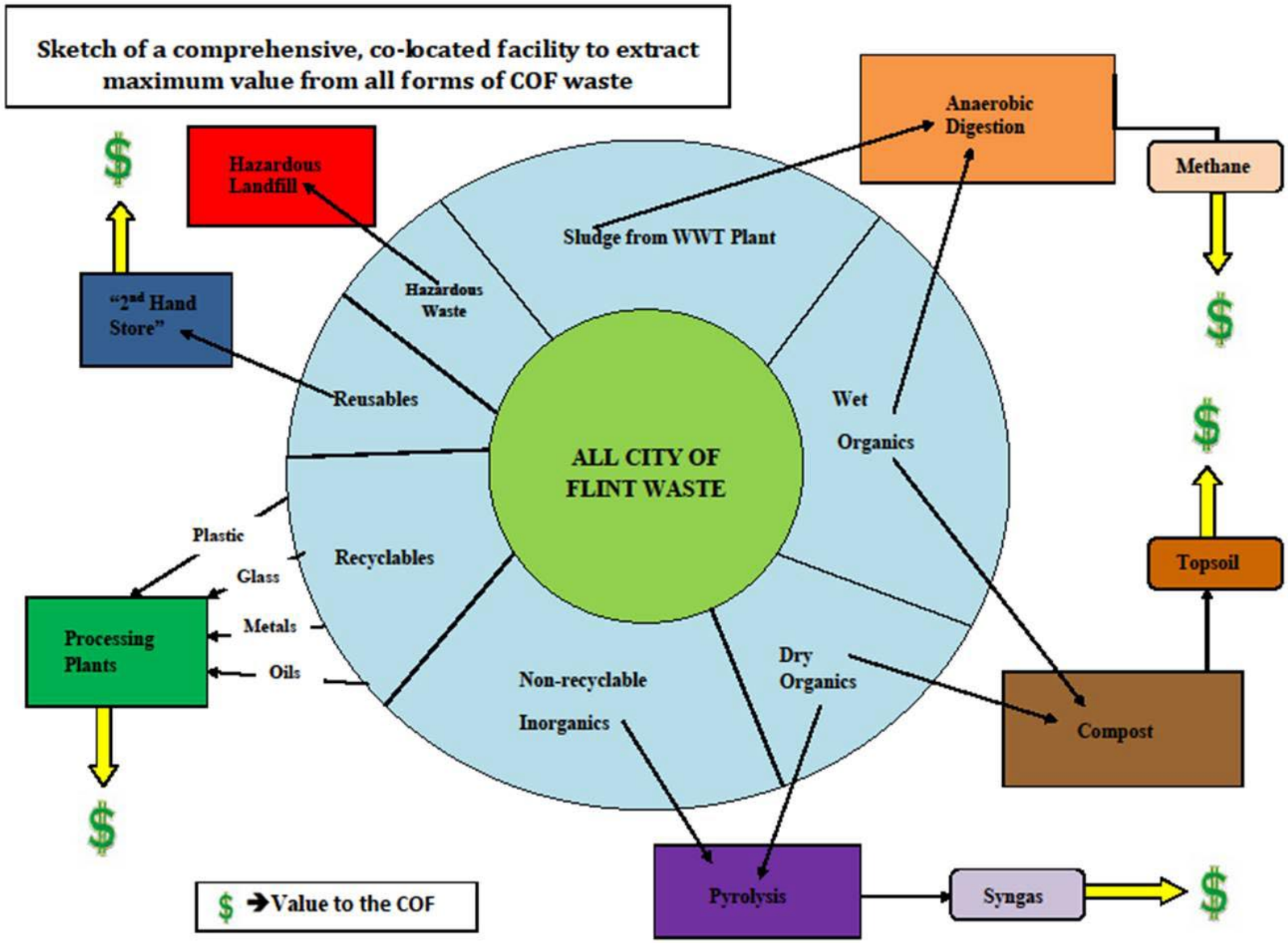
Sketch of a comprehensive, co-located facility to extract maximum value from all forms of COF waste
Hazardous Landfill
"2nd Hand Store"
Processing Plants
Anaerobic Digestion
Methane
Topsoil
Compost
Pyrolysis
Syngas
ALL CITY OF FLINT WASTE
Hazardous Waste
Sludge from WWT Plant
Reusables
Wet Organics
Recyclables
Plastic
Glass
Metals
Oils
Non-recyclable Inorganics
Dry Organics
$ ➔Value to the COF

Green Purchasing Policies

This topic was presented by Kate Fields of Advanced Solutions Group. PLEASE REFERENCE ATTACHMENT E: CONSULTANT REPORTS –*GREEN PURCHASING POLICIES.*

Green Procurement is the purchase of environmentally preferable products and services. These products are preferred because they conserve resources, create less pollution and waste, or eliminate health and safety risks.

The paper and presentation demonstrated:

A. What a Green Purchasing Policy should do.
B. Why the COF should develop and adopt a Green Purchasing Policy.
C. How to Start Developing a Green Purchasing Policy.
D. Sample Policies that could be emulated and/or modified for COF use.
E. Sample Elements or Components of Green Purchasing Policies
F. Associations and Organizations that offer Green Purchasing Benefits

WHAT A GREEN PURCHASING POLICY SHOULD DO

- Minimize the consumption of non-replaceable natural resources
- Seek alternatives to products and processes which are detrimental to the environment
- Minimize waste, including: packaging, waste produced by the product (or service), and waste generated by the eventual disposal of the product
- Maximize the reuse and recycling of materials
- Stimulate demand for “environmentally friendly” products by letting manufacturers and suppliers know the environmental performance we expect in products
- Be an integral part of your organization’s Sustainability Plan
- Focus on areas of immediate impact, but also include areas that can grow and provide long term results

- Make your suppliers understand that this is not a passing fancy but a major policy initiative that is here to stay

WHY THE COF SHOULD ADOPT A GREEN PURCHASING POLICY

The case for green purchasing was well made by the New Jersey Department of Environmental Protection, Office of Planning and Sustainable Communities (February 2006) in their publication *Green Purchasing: A Guide for Local Governments and Communities,*

> *"With growing frequency and urgency, local governments are realizing the need to meet stricter standards of environmental stewardship. Increasing costs of waste management, worker safety and public health concerns, and the emergence of acute and chronic environmental problems both locally and globally are just a few of the issues spurring on local communities to improve the environmental characteristics of their operations. Public demand for local administrations to adopt an overall "greener" approach is also increasing rapidly. In response, a growing number of local governments are now intent on avoiding the costs of environmental degradation, and are thereby committed to instituting more sustainable practices."*

The environmental impacts of local government operations directly relate to products purchased and used. The "greening" of public purchasing is therefore an immediate and practical step local government and communities can take to improve environmental performance. Green or **environmentally preferable purchasing (EPP)** not only helps improve environmental conditions, but also results in significant (but not always immediate) savings in local budget expenditures. EPP can also influence the behavior of other sectors, such as the business community, by setting an example and by sending clear signals to the market that there is a preference for green, clean and safe products. The purchasing decisions of a city, township or any other local government can have significant market influences. When municipal purchasing policies favor

ecologically sensible products and services, these goods become more readily accessible to individuals and smaller businesses. It therefore makes sense, economically as well as environmentally, for local governments to establish and implement EPP programs.

Growing interest and involvement in EPP by both public and private organizations have resulted in the availability of an increasing number of environmentally preferable alternative products in the marketplace, making the important transition to sustainable purchasing easier.

Environmentally Preferable Purchasing (EPP) is the purchase of goods and services that minimize environmental impacts. It includes the purchase of products that have “a lesser or reduced effect on human health and the environment when compared with competing products that serve the same purpose. Many factors are taken into account when making these comparisons, such as:

- the raw materials, including energy and water, used in the manufacture of the product
- the type of production, (i.e., use of cleaner production processes)
- packaging or distribution method
- source reduction and reuse
- distance of transport/ localness of production
- Price and performance are also important factors to consider and are critical determinants for purchasing agents. Adherence to quality and performance standards is a primary concern and need not be sacrificed. All these vital considerations could be expressed as follows:

Environment + Price + Performance = EPP

A proven beginning strategy in EPP consists simply of buying products with recycled content that are themselves recyclable….. Simply by instituting a “ buy recycled” program you too can start an EPP initiative. “

How to Start Developing a Green Purchasing Policy

There are numerous examples of planning steps to be taken when developing a Green Purchasing Policy. One of the best examples is also provided by the New Jersey Department of Environmental Protection, Office of Planning and Sustainable Communities (February 2006) in their publication *Green Purchasing: A Guide for Local Governments and Communities* and is illustrated by their planning matrix (Please see Exhibit 7. below).

EXHIBIT 7.

OVERVIEW: Action Steps for an Effective Environmentally Preferable Purchasing Program (EPP)

Setting Up an EPP Program	Implementing an EPP Program
1. Do an Environmental Audit or collect baseline information ◷Assess current procurement practices ◷ Identify in use products to eliminate or substitute	1. Create procedure to apply environmental criteria ◷ Evaluate products and alternatives using eco-labels & guidebooks ◷Consider reduction in primary usage at the outset
2. Set policy or pass resolution on EPP ◷ Provide direction to purchasing decisions ◷ Assume responsibility for better purchasing	2. Train staff and disseminate information ◷ Hold regular environmental training on EPP guidelines ◷ Provide appropriate information support
3. Establish up an EPP team ◷ Assign responsibilities involving both purchasing and environmental expertise ◷ Coordinate efforts through team approach	3. Integrate environmental aspects in purchasing documents ◷ Review legal instruments ◷ Modify bidding process/standard specifications & add lifecycle costing (if legally feasible)
4. Adopt specific goals ◷Start with simple changes ◷ Target environmental standards without sacrificing performance and costs	4. Communicate EPP needs to suppliers/vendors ◷ Establish clear lines of communication ◷ Ask suppliers for information and suggestions
5. Gather broad support ◷ Ensure management “buy-in” ◷Encourage participation of and feedback from everyone concerned (at all levels)	
Assessing the Program & Measuring Results . ◷Monitor and document product & service performance . ◷Evaluate and document economic impact	

SAMPLE POLICIES THAT COULD BE EMULATED AND/OR MODIFIED FOR COF USE

A wide variety of information sources and resources on EPP are available to support local government efforts and most are accessible from the Internet.

There are a number of federal government programs that support EPP which have generated a substantial body of information that is accessible electronically. For example, there has been a legislative mandate (under the U.S. Resource Conservation and Recovery Act of 1976) to "buy recycled" for a number of products (**www.epa.gov/cpg/)**. Many of the more established and successful programs have targeted a single attribute, e.g., recycled content or energy efficiency (**www.eren.doe.gov/femp/**). However, since 1993, a USEPA program, the result of a Presidential Executive Order, has provided guidance to federal agencies about ways to adopt a more comprehensive approach to "green procurement" (**www.epa.gov/opptintr/epp/**). The USEPA developed an environmental database that includes product specific information identified by domestic and international government programs and non-government organizations. Users can browse for criteria, standards, specifications, and contract language that can be applied to specific product categories. Another program developed by the multi-agency Joint Group on Environmental Attributes updates the Federal Logistics Information System to facilitate the identification of environmental aspects of products. The products belong to a computerized database of more than 7 million supply items. At the local level, the National Association of Counties has developed an "Environmental Purchasing Starter Kit" to assist stakeholders, such as, purchasing agents, county and city managers, environmental services staff, department managers, recycling coordinators, local elected officials, product users, and local government vendors (**www.naco.org/programs/environ/purchase.cfm/**). The kit can be downloaded from the NACo Web site. (2006 New Jersey Department of Environmental Protection, Office of Planning and Sustainable Communities).

Additionally, actual samples of Municipal Green Purchasing Policies can also be found in abundance on the internet.

SAMPLE ELEMENTS OR COMPONENTS OF GREEN PURCHASING POLICIES

Some common elements of most Green Purchasing Policies include:

- Definitions of terms utilized
- General considerations for product review
    - Life Cycle Assessment and Life Cycle Cost Analysis
    - Packaging
    - Recyclability
    - Toxins and Pollutants
    - Credible Third-party Certifications
        - ✓ Green Seal
        - ✓ EPA Design for the Environment
        - ✓ Scientific Certification Systems
        - ✓ ISO – International Labeling Standards
    - Eco-labeling
    - Energy Efficiency and Conservation
    - Energy Efficient Alternatives
        - ✓ Fuels
        - ✓ Vehicles
- General Product Standards. For Example:
    - Energy Star Specifications and Recommendations (Appliances and Equipment)
    - Electronic Product Environmental Assessment Tool (EPEAT)
- Product Categories and Specific Standards
- Action Steps of review of current products purchased
- Procedural Steps to be taken
    - Review of current products purchased
    - Action Steps to be taken to remediate existing contracts for products being purchased that are not EPP

- Action and Criteria Review Steps for new products to be purchased

ASSOCIATIONS AND ORGANIZATIONS THAT OFFER GREEN PURCHASING BENEFITS

The COF's purchasing department has many resources available to assist with the work of green purchasing. An abundance of Associations and Organizations exist that have already vetted products which they recommend for green purchasing. Many of these resources also offer discount pricing with membership. Some resources are:

- U.S. General Services Administration, 2009 Environmental Products Brochure http://www.gsa.gov/Portal/gsa/ep/contentView.do?contentType=GSA_BASIC&contentId=24601&noc=T
- Energy Star Purchasing and Procurement http://www.energystar.gov/index.cfm?c=bulk_purchasing.bus_purchasing
- National Green Pages http://www.greenamericatoday.org/pubs/greenpages/
- U.S. Environmental Protection Agency, Environmentally Preferable Purchasing http://www.epa.gov/opptintr/epp/
- Responsible Purchasing Network http://www.responsiblepurchasing.org/
- Recycled Products Purchasing Cooperative http://www.recycledproducts.org/index.html
- National League of Cities, U.S. Purchasing Alliance http://www.nlc.org/resources_for_cities/programs___services/137.aspx
- U.S. Communities Going Green Program http://www.gogreencommunities.org/
- State of Michigan, Mi Deal http://www.michigan.gov/documents/buymichiganfirst/MiDEAL_204962_7.pdf
- Buy Michigan First, Green Purchasing http://www.michigan.gov/buymichiganfirst/0,1607,7-225-50558---,00.html
- Green Electronics Council, Electronic Product Environmental Assessment Tool (EPEAT) http://www.epeat.net/

- Warm Training Center, Green Building Directory http://www.warmtraining.org/ResDir/
- Center for Resource Solutions, Green-e http://www.green-e.org/
- Pacific Northwest Pollution Prevention Resource Center, Environmentally Preferable Purchasing http://www.pprc.org/pubs/epp/epp_report.cfm#auto
- Green Seal http://www.greenseal.org/
- Product Stewardship Institute http://www.productstewardship.us/
- Scientific Certification Systems http://www.scscertified.com/
- Biodegradable Products Institute http://www.bpiworld.org/
- Consortium for Energy Efficiency http://www.cee1.org/gov/purch/purch-main.php3
- Conservatree http://www.conservatree.com/
- EnviroWindows http://ew.eea.europa.eu/ManagementConcepts/Greenp/F1056727684/F1075911075
- Environmental Building News, Building Green LLC http://www.buildinggreen.com/
- Tire Retread Information Board http://www.retread.org/

Financing Municipal Energy Projects

This topic was presented by Craig Hammond of Gault and Davison P.C. PLEASE REFERENCE ATTACHMENT E: CONSULTANT REPORTS –*FINANCING MUNICIPAL ENERGY PROJECTS.*

This was a thorough report and presentation which explained all aspects of State Law relating to Municipal Borrowings. For an in-depth review please reference the full report by Craig Hammond. Mr. Hammond provided a summary table (see Exhibit 8 below) of Flint borrowing options under state law for energy projects, and a

summary table (see Exhibit 9 below) of New Federal Bond Programs for energy projects.

EXHIBIT 8.

Type of Obligation	Source of Repayment for the Bonds	Challenges	Comments
Installment Purchase Contract	Limited tax general obligation pledge or energy savings	Works best for smaller capital projects with single vendor. Challenge finding lenders in current market.	For energy efficiency improvement, contract may limit payments to amounts realized from energy savings
Capital Improvement Bond	Limited tax general obligation pledge. Bonds sold to MMBA may include a pledge of City's state revenue sharing.	Revenue sharing pledge is subject to additional debt tests. There is a limited capacity so need to consider City's	Common method for cities to finance public improvements, but Revenue Sharing Pledge may be necessary

		overall strategic needs.	
Unlimited Tax General Obligation Bond	City authorized to levy taxes as needed to pay debt service on bonds	Requires voter approval	Not a commonly used method to finance capital projects due to voter approval requirements

EXHIBIT 9.

Name of Program	Nature of Tax Incentive	Requirements	Comments
Build America Bonds (Direct Payment Option)	Taxable bonds. City receives payment of 35% interest subsidy from IRS on each payment date	Available for any municipal capital project that would otherwise qualify for tax exempt financing	Popular new program. Limited investor demand for small BAB issues.
Recovery Zone Economic Development Bonds	Similar to BAB (Direct Payment Option), except City receives payment of 45% interest	Available for any municipal capital project that would otherwise qualify for tax exempt	City of Flint has $11,511,000 of RZEDB allocation. Expires 12/31/2010.

	subsidy from IRS on each payment date.	financing. Must be located in Recovery Zone.	
Recovery Zone Facility Bonds	Traditional Tax Exempt Bonds.	New capital project for any qualified business located in Recovery Zone. Available for private loans.	City of Flint has $16,579,000 of RZEDB allocation. Expires 12/31/2010.
Clean Renewable Energy Bonds	Tax Credit Bond. 70% interest subsidy.	New capital project for municipal renewable energy projects that qualify for production tax credit.	Subject to IRS competitive allocation process. Limited investor demand for tax credit bonds.
Qualified Energy Conservation Bonds	Tax Credit Bond. 70% interest subsidy	Certain Green Projects, including energy efficiency projects and renewable energy projects.	Limited amount of allocation to be distributed to City by State of Michigan. Limited demand for tax credit bonds.

In addition to the above funding mechanisms for municipal energy projects, Mr. Hammond also provided the information below regarding DOE Loan Programs:

Two types of DOE Loan Guarantee programs focused on renewable energy projects with total project costs over $25 million:

INNOVATIVE TECHNOLOGY LOAN GUARANTEE PROGRAM:

- U.S. Department of Energy (DOE) may issue loan guarantees for renewable energy projects that employ new or significantly improved technologies as compared to commercial technologies in service in the United States at the time the guarantee is issued.
- The loan guarantee program has been authorized to offer more than $10 billion in loan guarantees for energy efficiency, renewable energy and advanced transmission and distribution projects.
- Eligible projects include renewable energy projects that generate electricity or thermal energy and facilities that manufacture related components, electric power transmission systems, and innovative biofuels projects. Intent is to encourage early commercial use of new or significantly improved technologies in energy projects.

MAINSTREAM RENEWABLE ENERGY—FINANCIAL INSTITUTION PARTNERSHIP PROGRAM:

- In October 2009, the U.S. DOE issued a new solicitation for traditional renewable energy generation projects such as wind, solar, biomass, geothermal and incremental hydropower that are prepared to commence construction by September 30, 2011.
- The solicitation is funded with $750 million in ARRA funding and is expected to support as much as $4 to 8 billion in lending to eligible projects. The initial deadline for submissions under this solicitation is November 23, 2009.
- Program is designed to issue loan guarantees expeditiously to using proven technologies and conventional lender financing. DOE will only guarantee 80% of the face value of the project costs.
- Applications for this program are initiated by lenders.

Other Financial and Business Incentives for Energy Efficiency and Renewable Energy Initiatives for Municipalities include:

CONSUMERS ENERGY/DTE ENERGY'S COMMERCIAL ENERGY SAVINGS PROGRAM

- Pursuant to the Michigan's energy reform law, PA 295, the Clean, Renewable and Energy Efficiency Act of 2008, Consumers Energy and DTE have created programs to provide certain incentives for customers who upgrade their facilities with energy efficient equipment.
- These programs provide design assistance and incentives for more efficient buildings by installing energy-efficiency equipment and controls that are not required by building energy codes and are above standard construction practices.
- Prescriptive incentives (maximum $100,000 per facility) are available for energy efficiency equipment upgrades and improvements, and paid based on the quantity, size and efficiency of the equipment.
- Custom incentives (maximum $200,000 per facility) are available to customers for more complex energy saving measures and must have a payback period of between 1 and 10 years. Custom incentives are paid based on the first-year energy savings, and are eligible for both gas and electricity rebate amounts.
- To participate, the municipality must verify with the electric utility that its project is eligible for the incentive prior to commencement of construction or installation. Projects that are not eligible for an incentive include:
    - Fuel switching (e.g. electric to gas or gas to electric)
    - Changes in operational and/or maintenance practices or simple control modifications not involving capital costs
    - On-site electricity generation
    - Projects that involve peak-shifting (and not kWh savings)
    - Projects involving renewable energy

MICHIGAN SAVES

- Michigan Saves is a new loan program that is currently in development phase that will make energy efficiency upgrades and installing renewable energy systems more affordable for local governments by providing a mechanism for financing the installation with no upfront costs.
- Customers pay back the cost of the measures over time using utility bill savings or other means. Focus is on residential, school, municipal and small commercial loans.
- Michigan Saves has received $6.5 million of base funding provided by the MPSC. Pilot projects are expected to be launched by the end of 2009. Full implementation of Michigan Saves expected to begin in mid- to late 2010.

Recommendations for Financing Mechanisms to be utilized, for recommended programs and projects, will be discussed further in section 19.The Strategic Plan.

Potential "Other Grants" funding for Energy and Green Activities

This topic was presented by Kate Fields of Advanced Solutions Group. PLEASE REFERENCE ATTACHMENT E: CONSULTANT REPORTS –*POTENTIAL OTHER GRANTS.*

Basic categories of funding streams were presented and included:

- Grants
  - Federal
  - State
  - Foundations
- Loans
  - Banks
  - Federal Government
- Loan Guarantees
  - CDBG – Section 108 Loan Guarantee
  - DOE – Loan Guarantee

- Existing COF Annual Block Grants or Special Grants/Programs
    - Community Development Block Grant (CDBG)
    - HOME Investment Partnership
    - Community Development Block Grant – Recovery (CDBG-R)
    - Neighborhood Stabilization Program (NSP Round 1)
    - Neighborhood Stabilization Program (NSP Round 2)

Although the COF regularly receives entitlement grant funds and has the potential for accessing additional grants, there are several considerations which affect the use of these funds for energy and green projects:

MANY COMPETING USES FOR EXISTING FUNDS

As city revenue has continued to shrink, the COF has found it necessary to utilize the bulk of entitlement grants to supplement activities that are eligible under the funding rules (i.e., sidewalk repair, sewer and water projects, special sanitation projects, emergency housing repair, etc.). These activities and programs provide vital city services in low-income areas and it's always a tough decision to prioritize the allocation of these annual grant funds. While energy activities may be eligible under some entitlement grants the COF has previously prioritized other pressing needs.

The COF has however, now established policy for its Housing Programs which mandates that all housing construction criteria (for both new and rehabilitated homes) include energy efficient standards.

CRITERIA FOR ELIGIBLE USE MAY NOT FIT WHAT WE NEED

The trend for Federal and State grants is for energy efficient activities to be desirable and allowable expenditures. Not all energy projects and programs however, meet Eligible Use criteria. For example, the HOME Investment Partnership grant allows for energy efficient activities, for housing programs only. The COF could not use this grant to retrofit their own facilities.

Care and consideration must be used to determine which grant funds allow for which types of projects and activities.

SOMETIMES "MATCH" FUNDS ARE REQUIRED – WHERE DOES THAT COME FROM?

Many discretionary grants become available, with the caveat that the grant applicant provides matching funds. If the discretionary grant is a Federal grant, the rule is usually that other Federal funds cannot be used as a match source. This means that the COF must utilize General Fund dollars if they wish to access the discretionary grant. With the current COF budget crisis, it is highly unlikely that the city will be able to utilize General Fund dollars. This severely limits and hampers the city's ability to take advantage of many great opportunities for energy projects via discretionary funding. A possible option is for the COF to try to access private foundation grant funds as a source of matching funds.

SOMETIMES OUR TIMING ISN'T GOOD AND WE MISS THE BUS

With the advent of ARRA and Stimulus Funding there has been a fast and furious issuance of new grants available for energy programs and activities. Often the notice of Funding Opportunity Announcement (FOA) and the required response time turn-around either takes us unawares or provides little time to prepare an application. For example, in 2009 there was a FOA which would pay for the installation of an alternative fuels pumping station for municipalities. The COF was unaware of this opportunity and since it did not have a Strategic Energy Plan at the time of the FOA, the desirability of, and intent to use, alternative fuels was not even on the city's radar.

Another possible example is DOE's 2009 Retrofit Ramp-up grant. This grant sought comprehensive, community-wide programs and collaborations to make significant energy efficient and conservation impacts on a municipality's neighborhoods. While the COF made a valiant effort to put together such a plan (and did submit the grant) it's dubious that the city's application will successfully

compete against other communities nationally that have been better prepared and are further along with established community-wide energy programs.

A definition of "Luck" is when preparation meets opportunity. In order to promote future "Luck" for Flint, the city should do all that it can to be prepared to take advantage of future opportunities including:

- Adhere to, and implement the city's new Strategic Energy Plan (the EECS).
- Consciously promote energy efficiency and conservation in all aspects of city operations and programs.
- Educate city staffers and the community about both Renewable Energy Technologies and energy efficiency. Emphasize the potential that they have for green economic development (JOBS) in our community
- Secure buy-in from city staffers for their commitment to the city's energy and green agenda while encouraging input for pertinent change. Emphasize the cost savings of energy efficiency and how these savings can help save city jobs. Engage in regularly scheduled "Brainstorming" sessions between city administrators and staffers. Provide tracking documentation of energy, money and jobs saved through initiation of energy efficiency and conservation activities.
- Institute database management for compilation of relevant data for potential "Other Grants" funding.
- Compile data relevant for the planning and execution of energy activities, programs and future grant applications.
- Assign a city staff person to conduct daily searches for new funding opportunity announcements. Subscribe to pertinent grant notices listserves. Provide daily review of Federal web sites www.fedconnect.net and www.grants.gov
- Hire more Grant Writers
- Make a concerted effort to combine and utilize different-source funding streams for related projects (i.e. Block Grants, Brownfields, Economic

Development). Use of multiple grant sources often provides needed leveraging of funds.

- Continue to review and expand the city's Strategic Energy Plan to accommodate new opportunities and changing conditions.
- Work collaboratively with area residents, elected representatives, businesses, organizations, governments and institutions to promote a regional agenda for energy activities, programs and a green economy (please reference Section 18. Flint-Genesee Energy Coalition).

Flint-Genesee Energy Coalition

A Flint-Genesee Energy Coalition was proposed and presented by Kate Fields of Advanced Solutions Group, LLC. . PLEASE REFERENCE ATTACHMENT E: CONSULTANT REPORTS –*FLINT-GENESEE ENERGY COALITION.*

The purpose of a regional energy collaborative or coalition is as follows:

PURPOSE

- Unite to promote energy efficiency and conservation
- Establish community-wide goals
- Promote county-wide Green Practices and develop a regional Green Economy

OBJECTIVES

The objectives of the coalition would be:

- Identify and engage Government, Institutional and Private Industry Partners
- Promote Green Economic Development
- Promote Green Community Development
- Stimulate local research, development and manufacturing

BENEFITS

The benefits for partners and the coalition are:

- Leverage grants funding
- Coordinate activities and programs
- Savings through joint purchasing
- Share Practices, Policies and Expertise “Don’t reinvent the wheel”
- Why? Government Funders support collaborative efforts

PROPOSED PARTNERS

Proposed Partners are:

- Government
  - Municipalities, Townships and Villages
  - County
  - State
  - Federal
- Institutions
  - K-12 Education
  - Colleges and Universities
  - Genesee County Land Bank
  - Hospitals and Health Facilities
  - Jobs Training Agencies
  - MTA
  - Non-profits
- Funders and Lenders
  - Banks
  - Foundations
- Private Industry
  - Manufacturers and Distributors
  - Entrepreneurs

- General Business
  - ✓ Construction and Installation
  - ✓ Retail
  - ✓ Service
  - ✓ Technology

HOW DO WE BEGIN? FIRST STEPS:

The COF should assume leadership responsibility and coordinate activities. Start by organizing Partner Category Committees:

- Government
- Institution
- Private Industry and Business
- Funders and Lenders

Ask committees to identify interest areas through surveys:

- What energy activities are you already engaged in?
- What would you like to pursue?
- Suggest ideas for coalition activities

Committees then coordination with coalition as a whole:

- Committees assign representatives
- Coalition Strategic Plan developed from survey results
- Tasks assigned according to Action Steps

Some mutually beneficial, coalition activities are:

- Green Purchasing Policies including benefits of Joint Purchasing
- New “Green” Job Creation
- Green Jobs Training and Placement Opportunities
- Legislative “Assists” for proposed projects and programs
- Integration of Coalition Member Initiatives

- Coalition Participation in Clean Cities, Michigan Green Communities and other beneficial alliances

CLEAN CITIES

The mission of Clean Cities is to advance the energy, economic, and environmental security of the United States by supporting local decisions to adopt practices that reduce the use of petroleum in the transportation sector. Clean Cities coordinators lead local geographically-based coalitions composed of local fleets, fuel providers, and decision-makers that focus on a united goal: petroleum reduction. There are nearly 90 coalitions covering areas where 229 million U.S. citizens live—approximately 78% of the country's total population. Since its inception in 1993, Clean Cities and its stakeholders have displaced more than 2 billion gallons of petroleum. http://www1.eere.energy.gov/cleancities/

MICHIGAN GREEN COMMUNITIES CHALLENGE

The Michigan Green Communities Challenge has been announced by DELEG and the Michigan Municipal League. The program will provide communities with tools to incorporate energy efficiency and conservations strategies. Daniel P. Gilmartin, executive director and CEO of the League, added, "At its most basic level, the Challenge is a recognition program developed through the joint efforts of the Bureau of Energy Systems and the League and is intended to provide a roadmap for all communities—large and small—to 'go green.' The Challenge is designed to assist communities that apply for funds under the Energy Efficiency and Conservation Block Grant Program. http://www.mml.org/resources/educenter/green_challenge.html.

As we all know, the Flint, Genesee County region has been experiencing severe economic hardship in the past few years. The Flint-Genesee Energy Coalition can serve as an impetus to positive self-determination, or as Alan Kay stated, "The best way to predict the future, is to invent it."

The Strategic Plan – Synopsis, Prioritization and Recommendations

The Strategic Plan was presented by Kate Fields of Advanced Solutions Group.. PLEASE REFERENCE ATTACHMENT E: CONSULTANT REPORTS –*THE STRATEGIC PLAN – SYNOPSIS, PRIORITIZATION AND RECOMMENDATIONS*

.

A goal of the EECBG is to recommend an energy strategy – Ideas for today and tomorrow.

OUR VISION

Flint, a city that is environmentally sustainable and which maximizes green economic benefits for our local and regional communities.

OUR MAJOR GOALS

- Be Energy Efficient and "Green" in all aspects of City Government
- Maximize General Funds available for other City Services by saving Energy Costs
- Promote a prosperous local economy by fostering Green Economic Development

OUR CURRENT SITUATION

- We have no "Green" or Renewable Energy City Policies
- City Revenue has been steadily decreasing
- There are many competing needs for City Revenue
- The Energy Efficiency and Conservation Block Grant is giving us an opportunity to achieve our Goals – LET'S MAKE THE MOST OF IT

PART IV: RECOMMENDATIONS AND ACTION STEPS

RECOMMENDATIONS

The approach taken for developing the City of Flint's Energy Efficiency and Conservation Strategy (EECS) was intentionally broad and comprehensive. A wealth of recommendations were made by all the energy subconsultants involved in the process. These recommendations can be categorized into three groups:

Group One: No additional funding required

Recommendations that do not require the use of special funding in order to implement actions.

CONSUMERS ENERGY BILLS

- The COF currently pays 147 separate Consumers Energy bills (accounts). Review all accounts to ensure that these are legitimate expenditures for COF owned/leased and operated facilities.
- Make connection between COF properties owned and/or leased and a bill that is being paid per the account number.
- Identify a bill that is being paid and the COF type of usage. Differentiate between a building/facility, power stations, etc. and Traffic and Street Lights.
- Find out why we have bills that are being paid with no record of COF own/lease or use. Identify specific Consumers Energy account numbers .
- Make connection between specific Traffic and Street Lights and a bill that is being paid.
- Cut off services for non-legitimate bills and try to recoup refunds (normally only allowed for an 18 month period).
- Track funds being saved and energy being saved.

- Identify closed or non-operational facilities that are being charged monthly utility bills. Arrange for energy audits, winterization procedures (nominal bill).
- The COF should track every energy bill (in addition to total amount of bill) to include:
  - Units of energy being used (electric and gas)
  - Rates being charged per unit of energy used

[NOTE – It's recommended to also check water and sewer bills or any other facility charges being paid]

CITY OWNED PROPERTIES AND FACILITIES

- Get entire list (from Assessor's office of city owned properties).
- Determine usage of all these properties. Why does the city own them? Are they operational facilities and if so what operation? Non-operational? Foreclosed and/or abandoned? Being held for future development projects? If so, which ones and identify properties per project. Why does the city own these properties?
- Data tracked on all properties owned and all properties leased or utilized where the COF pays the utility bills. All utilities and maintenance charges information compiled and regularly scheduled reports provided.
- If properties are not needed/used determine method of disposal and procedure for same.
- Determine all info needed for Investment Grade (energy) Audits (IGAs) and prioritize facilities. Estimate energy and costs savings per facility through energy conservation.
- Determine and track all hours/days of use if operational.
- Determine and track all taxes not being paid on these exempt properties. Track savings and/or revenue generated if they were sold and no longer tax exempt.

- Data tracked and reported – Energy use, paid, saved, greenhouse gas emissions, linked to facility and usage—per account.

Fleet Inventory and Fuels

- Promote 6-7 year turn-over of inventory to reflect most current technology (Alternative Vehicles and Alternative Fuels) and energy efficiency.
- Right size inventory. Link inventory with city employees available to utilize
- Advance Transportation purchasing (reference "to be established" Green Purchasing Policies).
- Disposal of excess inventory.
- Data tracking, maintenance, fueling and costs of non-alternative v. alternative vehicles .
- Energy used (per type and amount of fuel) saved, costs, greenhouse gas emissions.
- Develop Minimal 5 year strategic plan for Fleet Inventory.
- Provide training for Fleet Management on Alternative Vehicles and Alternative Fuels.
- Secure funding for, and install, Alternative Fuels pumping station.

Conduct a City Wide Inventory – Equipment

- Forensic – purchased against on hand.
- Per department, per employees to utilize, where kept, who is responsible, procedures for use, purchasing process and disposal recommendations.

Policies Needed and Recommended

City Wide Green Purchasing

- Purchase criteria (checklist) to be produced and utilized.
- Purchase process – written process to include EE and green criteria
- Monthly reports utilizing checklists.

- Data tracking (and reporting) to include energy saved, costs and greenhouse gas emissions.
- Joint purchasing.
- Review existing product and service purchase contracts. Attempt to revise to allow for substitution of green products where possible.

Use of computers and Information Technology

- Power-down
- Turn-off
- Inventories kept and archived (**including all offsite**) to be checked against purchasing invoices and Energy Star Standards.
- All offsite (community centers, etc.) technology to also be part of ITS responsibilities.
- Energy Star Purchases only.
- Minimal 3 year strategic plan for purchase, functionality, usage and disposal.

Housing Programs and Policies re EE and Green

- EE and Green Training made available for general public and Subrecipients (web site).
- Develop and provide RFP criteria for energy efficient building.
- Energy Efficient and Green criteria included in Consolidated and Action Plans.
- Specific Grant Funds, specific projects to include EE.
- Specific Activities (energy audits, green building) and standards, guidelines provided.

Renewable Energy Technologies Ordinances

- Adopt new city ordinances for Renewable Energy Technologies (adapt Model Ordinances and Best Practices of Industry)
    - ✓ Building Codes

    - ✓ Zoning
    - ✓ Planning
- Technologies to be included (both Residential and Commercial Scale)
    - ✓ Solar Photovoltaic
    - ✓ Solar Thermal
    - ✓ Wind
    - ✓ Geothermal
    - ✓ Biomass
    - ✓ Biofuels
    - ✓ Hydroelectric
- Incorporate and/or consider Renewable Energy Technologies in all COF planning documents.
- Provide Renewable Energy Technology training for City Inspectors and Code Enforcement Officers.

GREEN ECONOMIC DEVELOPMENT

This is yet another area that requires an intensive review for needed policies and procedures. In the course of investigating for "Green" Economic Development it was discovered that the topic as a whole is poorly organized and implemented in the COF:

- It's not clear whether the responsibility for this activity lies with the COF, the Genesee County Regional Chamber of Commerce, the Enterprise Community (Urban Renewal Designation), the Mike Brown group, Flint Area Reinvestment Office (FARO), or an **uncoordinated** combination of all of the fore mentioned. Roles and responsibilities are not at all defined (in a written agreement), nor is it clear how or when they collaborate.
- It's not clear who (or what department) at the city has this task. Is it the Mayor's Office or the Department of Community and Economic Development? Within those offices, which job position(s) has this responsibility?
- There are no existing written policies, procedures or processes for this topic

- There is **no Strategic Plan** for this topic..
- There are no identified or dedicated funding streams for this topic.
- There are **no clearly defined** programs for this topic.
- There is no COF database management of/for this topic (i.e., commercial and/or industrial facilities available, what facilities are available within what special tax zones, a compiled listing and mapping and explanation of tax and financial incentives who is/has inquired for assistance, what their needs are, project files which demonstrate what the COF is doing for them, has done, what unmet needs exist, etc.)
- There is no COF compiled database of area manufacturers and/or businesses
- There is no clearly defined linkage on COF web site to direct business to whatever existing services and/or programs there may be in the city and/or region/state.

A tremendous resource for this topic is the recent study by AECOM *Flint and Genesee County Comprehensive Economic Development Strategy (CEDS)*, March 1, 2010. PLEASE REFERENCE ATTACHMENT F: OTHER DOCUMENTS –*FINAL CEDS.*

While the COF is a participant in this collaborative Economic Development initiative, at the current time the report's recommendations for a unified "One Stop" entity (which would have the responsibility for area economic development) has not been implemented.

BROWNFIELD REDEVELOPMENT

Brownfield projects are no longer viewed as merely extensions of environmental clean-up programs but are now designed as a tool to further urban growth management. Brownfield policy, programs and projects are integral to Sustainable City and Community and Economic Development initiatives. Benefits of Brownfield projects include:

- Regular, dedicated funding opportunities from State and Federal Governments.
- Funding opportunities may allow for Match or Leverage for energy, community and economic development projects.
- 2009 MEDC Brownfield Program Guidelines are biased towards projects that promote a Green Economy:
    - Green Buildings
    - Green Jobs

WEAKNESSES IN COF BROWNFIELD ACTIVITIES

Weaknesses observed in the COF's Brownfield activities include:

- **No Strategic or Long-term Plan** for Brownfield development.
- Lack of Land Use Planning for Brownfields
- No linkage(s) to other COF grant programs.
- No written processes or procedures to address Brownfield activities.
- Unclear staff assignment(s) for Brownfield activities.
- No database or database management of eligible COF Brownfield properties.
- Lack of Permit Streamlining for Brownfields.
- Lack of Quick Response Time for potential projects.
- Minimal and infrequent application for available project funding.
- Lack of clear/direct linkage on COF web site regarding Brownfield inquiries or projects, and/or city management of same.

A tremendous resource for this topic is the recent study by AECOM *Flint and Genesee County Comprehensive Economic Development Strategy (CEDS)*, March 1, 2010. PLEASE REFERENCE ATTACHMENT F: OTHER DOCUMENTS –*FINAL CEDS.*

While the COF is a participant in this collaborative Economic Development initiative, at the current time the report's recommendations for a unified "One Stop" entity

(which would have the responsibility for area economic development) has not been implemented.

COF Web Site - General Recommendations

There are numerous problems with the COF web site which makes it a less than optimal tool to be utilized for energy efficiency and/or green initiatives:

- Ensure that COF web site is functional on all browsers
- Ensure that COF Going Green web page(s) are functional
- Include **interactive (searchable) GIS Maps** for Brownfields, EE activities and achievements, Economic and Community Development:
    - Municipal Buildings – locations, functions, operations
    - Tracking Municipal Activities – performance measurement
    - Grants related activities (housing, etc.) and current projects
    - Economic Development and private industry, nonprofit EE – who is doing what, jobs and performance measurement
    - Partnerships, projects and accomplishments in COF
    - EE and Energy Star Buildings in COF
    - Training Programs
    - Special Tax Zones with benefits and requirements – who to contact and links

Add on to COF Going Green Page

- Model content on Greening Detroit http://www.greeningdetroit.com/
- EE and LEED building training videos
- Energy Presentations, Reports and PowerPoints
- Explanation and Process: Application for EE programs/projects
    - Revolving Loan Fund – Recycling Business Subsidy (explanation of program and how to apply)
    - Revolving Loan Fund – Homeowner EE retrofits (explanation of program and how to apply)

    - Energy Audits for Homeowners
- Progress reports COF EE activities, programs, projects
- Some Vital Links to be added
    - DESERE – Federal and State Energy Financial and Tax Incentives for residents and business
    - Energy Star Home Page
    - Green Building and Products Directory
    - COF participation in energy coalitions – Energy Partners and their activities and programs
    - Benchmark current GHG and Tracking and Reporting of COF Greenhouse Gas Emissions

Group Two: Use other funding mechanisms

Recommendations for energy and cost saving actions that can be financed through funding mechanisms other than the DOE EECBG allocation.

ENERGY PERFORMANCE CONTRACT WITH ESCO

City of Flint facilities, Investment Grade Energy Audits, Conservation Measures and Reporting. Typical savings from energy conservation measures is in a range of 15-50%. It's difficult to provide an estimation of cost savings since clarification is needed regarding what Consumers Energy account is linked to which facilities. Clarification is also needed to determine the total number of COF facilities, both open and closed.

In 2009 the COF paid Consumers Energy $2,608,114 for utility charges **other than** Traffic and Street Lights. A 15-50% savings would be $39,122 to $1,304,057 annually. This estimate is at the current rate charges and is not taking rising energy costs into account.

Since the debt service to the ESCO is paid back through the energy savings and the amount of debt is tied to what/which conservation measures are conducted—it's difficult to estimate a pay back time period. At some point in time however, the debt service will be paid and there will be considerable energy and cost savings. This means less funding has to come out of the general fund to pay the cost of utilities, permanently.

Energy Service Companies (ESCOs) will engage in long-term contracts (typical 15-20 years) to manage the energy used in (governmental) facilities. The services typically will include:

- Investment Grade (Energy) Audits (IGAs) to determine current energy usage and to determine recommendations for conservation measures to be taken. Includes cost estimates.
- Construction of Conservation Measures to retrofit facilities to energy efficient standards.
- Financing of Conservation Measures with debt paid back through subsequent energy savings.
- An impediment to be overcome is the City of Flint's current credit rating-which is not good. Financing and interest rates are often determined by credit ratings.
    - COF must work with ESCO to determine which facilities will be retrofitted, to what extent, in what order.
    - Benchmark current GHG. Reduction of Greenhouse Gas Emissions should be tracked and reported.

TRAFFIC AND STREET LIGHTING LED RETROFITS

Traffic and Street Lighting LED Retrofits with Installment Purchase Agreement with materials manufacturers. The analysis provided by Dr. Pimentel of AltEnergy estimated that the COF could save over $2M per year by retrofitting their Traffic and Street Lights with LED technology. Estimated cost of project is $7M with a 2.9 year Return on Investment (ROI).

At this time, the COF owns the Traffic Lights, but Consumers Energy owns the Street Lights. While utility charges for facilities are based on rates set by the Michigan Public Utility Commission, the rates paid for Traffic and Street Lights are determined by a negotiated contract with Consumers Energy. The current contract:

- Renews automatically every five years, unless renegotiated.
- Is due to renew in early summer of 2010.
- Includes maintenance of the lighting
- Is currently estimated at 0.28¢ per kWh (high rates due to maintenance costs included in per hour rate).

The retrofitting to LED technology would necessitate new contract negotiations based on choices available to the COF. Cost analysis needs to be conducted based on the following city choices and decisions:

- The COF chooses to own the Street Lighting fixtures.
- The COF chooses to pay for retrofitting of Consumers Energy (CE) poles (ballasts and lamps only) and CE retains ownership of the basic fixture.
- If the COF chooses to replace and now own the basic fixtures. The city now has the following maintenance choices:
    - Pay a higher per kWh rate to Consumers to include maintenance
    - Privatize and outsource maintenance per an RFP
    - Use city staff as in-house maintenance workers.

[NOTE – one of the advantages of LED technology is that bulbs are only replaced approximately every ten years]

In addition to lower energy and maintenance costs, there are other benefits to LED technology. The new systems include computer connected (wireless) automation which allows for:

- Remote control of lighting including timing, powering up or down, etc.
- Remote tracking and reporting of functionality

- Smart Grid functionality

Financing the LED retrofits can be accomplished through an installment purchase contract with the manufacturers. An impediment to be overcome is the City of Flint's current credit rating-which is not good. Financing and interest rates are often determined by credit ratings.

Although there are currently no know grants available for this activity, it's worthwhile to monitor for opportunities that might arise.

Current Greenhouse Gas Emissions of Traffic and Street Lighting should be benchmarked and reductions (due to LED) should be tracked and reported.

RENEWABLE ENERGY TECHNOLOGIES (RET)

Although there are ultimately huge cost, energy and greenhouse gas emission savings to be gained through the implementation of RET, the initial project costs can be daunting, and a major impediment. There are however, new opportunities arising frequently for grant funding for these activities. The rate of Return on Investment is significantly lowered through the use of grant funds.

If the COF could obtain funding for implementation of RET (Solar Photovoltaics would be the first choice) it could conceivably produce enough energy to power its own facilities, thereby almost eliminating utility charges altogether. There are many factors which influence this including:

- The number of systems installed
- The size of the systems
- The locations of systems (COF has many owned and operated facilities at different geographic sites).
- Michigan current Net Metering Rates and the passage of new legislation allowing for Feed-In-Tariffs (Please reference Section 3 – Legislation Affecting Energy Issues).

Given the clear, long-term advantages and benefits of RET it is highly recommended that the COF monitor grant opportunities for implementation. It would also be worthwhile to aggressively seek funding from local foundations for these activities.

RET may eventually prove to be a major economic development factor if the COF could:

- Encourage RET manufacturers to locate here.
- Create large scale commercial Solar and Wind Farms on what is now vacant land and/or Brownfields.

[NOTE – it is imperative that the COF establish RET Ordinances]

If RET is implemented in COF facilities, current Greenhouse Gas Emissions should be benchmarked and reductions (due to RET) should be tracked and reported.

Group Three: EECBG Allocations

Recommendations that will utilize the DOE EECBG allocation, mostly to "jump start" activities, programs and goals. See Exhibit 10 below for allocation recommendations. These allocations were approved by Flint City Council, Resolution 091046 on September 23, 2009.

ADMINISTRATION (OF GRANT)

$75,000 is allocated. This allocation is for the grantee (COF) to administer the DOE EECBG. There are numerous administrative and reporting activities that are required. This activity did not require NEPA review. Please reference Part V Grant Administration and Reporting.

Revolving Loan Fund Part I – Homeowner Energy Retrofits

$120,000 is allocated. This activity will provide loans of approximately $12,000 to ten Homeowners to conduct energy audits and enact conservation measures for energy efficiency. This activity required NEPA review.

Some tasks that will need to be accomplished:

- Assign staff for project
- Develop underwriting criteria
- Marketing of opportunity
- Client Intake and Loan processing
- Recordkeeping processes and procedures established
- Database management and reporting (to sync with grantee grant management)
- Benchmark current GHG and tracking and reporting of reduced Greenhouse Gas Emissions

Revolving Loan Fund Part II – Subsidy for Recycling Company

$130,000 is allocated. This activity will provide either a single loan or up to three loans (at a lesser amount) for businesses that make a product in Flint, utilizing materials that are recycled. It is intended to help provide a market for recyclables from COF Waste Disposal. This activity required NEPA review.

Some tasks that will need to be accomplished:

- Assign staff for project
- Develop underwriting criteria
- Marketing of opportunity
- Client Intake and Loan Processing
- Recordkeeping processes and procedures established

- Database management and reporting (to sync with grantee grant management)
- Benchmark current GHG and tracking and reporting of reduced Greenhouse Gas Emissions

ENERGY AUDITS FOR 100 HOMEOWNERS

$50,000 is allocated (100 audits at $500 each). This is intended to assist low-to-moderate income homeowners with efforts to make their homes more energy efficient. Participating homeowners will be encouraged to subsequently apply for the Revolving Loan Fund Part I for funds to enact conservation measures and/or to GCARD for Weatherization services. This activity did not require NEPA review.

Some tasks that will need to be accomplished:

- Assign staff for project
- Develop application and acceptance criteria
- Request For Proposal (RFP) or extension of NSP Round I contract for Energy Auditing Services
- Contract Management
- Marketing of opportunity
- Client Intake and processing
- Recordkeeping processes and procedures established
- Database management and reporting (to sync with grantee grant management)
- Benchmark current GHG and tracking and reporting of reduced Greenhouse Gas Emissions

BUILDING AUTOMATION FOR IT AND CITY HALL LIGHTING

$125,000 is allocated. This activity involves implementing a computer-controlled system for COF (main facilities) Information Technology and Lighting in order to reduce energy usage and costs. This activity did not require NEPA review.

Some tasks that will need to be accomplished:

- Assign staff for project liaison
- Develop and administer an RFP
- Contractor Award and contract
- Contract Management
- Recordkeeping processes and procedures established
- Database management and reporting (to sync with grantee grant management)
- Benchmark current GHG and tracking and reporting of reduced Greenhouse Gas Emissions

SERVICES AND SOFTWARE TO TRACK COF GREENHOUSE GAS EMISSIONS

$15,000 is allocated. DOE EECBG reporting requires the tracking and reporting of Greenhouse Gas Emissions (GHG) reduced through Energy Efficiency and Conservation activities. This activity involves implementing a software (with services) to create and maintain a database which will enable the COF to report on reduced GHG. This activity did not require NEPA review.

Some tasks that will need to be accomplished:

- Assign staff for project liaison
- Develop and administer an RFP
- Contractor Award and contract
- Contract Management
- Recordkeeping processes and procedures established
- Database management and reporting (to sync with grantee grant management)
- Benchmark current GHG and tracking and reporting of reduced Greenhouse Gas Emissions

STAGE ONE ACTIVITIES FOR COF WASTE FACILITY

$232,913 is allocated. This activity involves a Stage One: Cost, Engineering and Feasibility study for the establishment of an All Waste Disposal Facility for the COF. It is intended to turn what is now **a Cost Center** (approximately $4.5M annually) **into a Profit Center** (just COF waste is estimated at $3M annually).

There is enormous potential for job creation and revenue generation for the COF. [NOTE – in addition to COF waste, other local governments could send their waste for disposal] This activity did not require NEPA review. (PLEASE REFERENCE THE REPORTS ON *MATERIALS RECOVERY AND WASTE DISPOSAL* BY RYAN AND DR. OSWALD, AND *FINANCING MUNICIPAL ENERGY PROJECTS* BY CRAIG HAMMOND OF DICKINSON AND WRIGHT)

Some tasks that will need to be accomplished:

- Assign staff for project liaison
- Develop and administer an RFP
- Contractor Award and contract
- Contract Management
- Liaison with Swedish Biogas firm and Genesee County Drain Commissioner
- Recordkeeping processes and procedures established
- Additional Stage(s) planning and implementation
- Financing obtained for future Stages

[NOTE - Current Greenhouse Gas Emissions should be benchmarked and reductions (due to improved Waste Disposal) should be estimated, tracked and reported.

Additional Recommendation for Revenue Generation through Waste

Since significant revenue can be generated through the capture of methane gas in landfills, the COF should research old (closed) landfills in the city and investigate their potential for methane capture and use/sale.

Project Management for Energy Activities

$150,000 is allocated. There are numerous projects and activities that have been recommended that require project management. This activity did not require NEPA review. The four specific projects listed below are included as (funded) project management activities under Flint's DOE EECBG.

- Traffic and Streetlight LED Retrofit
- COF All Waste Facility
- Green Purchasing Policies
- Flint-Genesee Energy Coalition

Also requiring Project Management but not stipulated in DOE allocation:

- ESCOs and IGAs for COF facilities
- Energy Audits for Homeowners
- Revolving Loan Fund Part I – Energy Audits for Homeowners
- Revolving Loan Fund Part II – Subsidy for Recycling Company Entrepreneurs
- Building Automation
- Greenhouse Gas Emissions
- RET Ordinances
- COF web site – Green Page improvement, updating and continual management

PROJECTS AND ACTIVITIES: ALLOCATIONS APPROVED BY CITY COUNCIL

The following (Exhibit 10) DOE EECBG funding recommendations were approved by both the City Administration and Flint City Council

EXHIBIT 10

EECS Funding Recommendations

Caps on Use	Use	Activity	Amount Max for Caps	Amount Rec	Balance Remaining after Amt Recommended
					$ 1,147,900
$250,000	Planning	Plan	$ 250,000	$ 249,987	$ 897,913
10% or 75,000 Which ever is greater	Administration	Administer	$ 114,790	$ 75,000	$ 822,913
20% or 250,000 Which ever is greater	Revolving Loan Funds		$ 229,580		$ 822,913
		RLF - Homeowner Energy Retrofits: 12 @ $10,000 each		$ 120,000	$ 702,913
		RLF - Subsidy for Recycling Co Entrepreneurs		$ 130,000	$ 572,913
20% or 250,000 Which ever is greater	Sub grants non-city orgs		$ 229,580		
	Eligible Activity	Energy Audits: 100 homes @ $500 per		$ 50,000	$ 522,913
	Eligible Activity	Building Automation Pilot Program for IT and Lighting in Main City Hall Complex		$ 125,000	$ 397,913
	Eligible Activity	Services and Software to Track Greenhouse Emissions by COF		$ 15,000	$ 382,913
	Eligible Activity	Stage One Activities: Professional Services for COF All Waste Facility		$ 232,913	$ 150,000
None	Project Mgmt and Facilitation 4 main projects	1. Traffic and Street Light LED Retrofit		$ 150,000	$ -
		2. COF All Waste Facilty			
		3. Green Purchasing Policies			
		4. Flint-Genesee Energy Coalition			
TOTALS				$ 1,147,900	

Advanced Solutions Group LLC

PART V: GRANT ADMINISTRATION AND REPORTING

NOTES ON DOE SUBMISSION(S)

The original grant submission was prepared and submitted by Carol Freeman in the Department of Community and Economic Development (DCED) through www.fedconnect.net. This submission consisted one Project Activity Sheet for the funds to develop the City of Flint's Energy Efficiency and Conservation Strategy (EECS), and the required SF424 and certification documents (PLEASE REFERENCE ATTACHMENTS – DOE SUBMISSIONS, PART I).

The DOE subsequently awarded the COF $250,000 for technical assistance in order to develop an EECS. The contract for technical Assistance was awarded to Advanced Solutions Group LLC.

The DOE Award Date was August 10, 2009 and by regulation, the EECS had to be submitted within 120 days, or by December 7, 2009.

The second submission (Part II) was prepared by Kate Fields of Advanced Solutions Group LLC. The documents were given to DCED staffers Christine Corbitt and Karen Morris (on December 1, 2009) for submission to DOE through www.fedconnect.net. Subsequent minor adjustments to the documents were required by DOE. Kate Fields worked directly with various DOE officials and submitted the finalized documents to these officials (PLEASE REFERENCE ATTACHMENTS – DOE SUBMISSIONS, PART II).

The required documents included:

- Attachment D – Strategy
- Project Activity Worksheet 1 – Revolving Loan Fund I Homeowner Energy Audits and EE Conservation Retrofits

- NEPA Environmental Review (NETL) – Revolving Loan Fund I
- Project Activity Worksheet 2 – Revolving Loan Fund II Business Subsidy/Loans for Recycled Products Manufacturers
- NEPA Environmental Review (NETL) – Revolving Loan Fund II
- Project Activity Worksheet 3 – Energy Audits
- Project Activity Worksheet 4 – Building Automation
- Project Activity Worksheet 5 – Greenhouse Gas Emissions
- Project Activity Worksheet 6 – Materials Recovery and Waste Management
- Project Activity Worksheet 7 – Project Management
- S424A Budget
- Budget Justification
- Bacon Davis Letter

The COF was notified of DOE's acceptance of Flint's EECS on March 17, 2010. The notice of award can be viewed on www.fedconnect.net utilizing the COF account and password.

REPORTING

The distribution and uses of the Energy Efficiency and Conservation Block Grant funds must meet the reporting requirements of the U.S. Department of Energy and ARRA; some of the reporting criteria includes:

1. Jobs created and /or retained
2. Energy saved
3. Renewable energy capacity
4. GHG emissions reduced
5. Funds leveraged

Both DOE and ARRA require quarterly reporting by the grantee (COF) and major contractors. Reports are due within 10 days of the end of the last quarter. Reporting includes project activity progress reports, as well as financial reports.

The regulations for Financial Reporting specifically can be found in 10 CFR 600 §600.241 Financial Reporting. Guidance for reporting can be found at:

- **Registration Overview for OMB Section 1512 Reporting for DOE Prime Recipients** December 1, 2009 http://www.energy.gov/recovery/documents/1512_Prime_Recipients_Instructions.pdf
- **DOE Supplemental Instructions for OMB Section 1512 Reporting –**For Grant and Loan Recipients *Quarterly reporting through FederalReporting.gov* *http://www.energy.gov/recovery/documents/DOE_Supplemental__Instructions_for_OMB_Section_1512_Reporting_Grant_and_Loan_Recipients_Q1_2010.pdf*
- **DOE Supplemental Instructions for OMB Section 1512 Reporting –**For Contractors *Quarterly reporting through FederalReporting.gov* April http://www.energy.gov/recovery/documents/DOE_Supplemental__Instructions_for_OMB_Section_1512_Reporting_Contractors_Q1_2010.pdf
- **Department of Energy, Help with Federal Reporting** http://www.energy.gov/recovery/ARRA_Reporting_Requirements.htm

The DOE form and checklist for Federal Assistance Reporting can be found in the Attachments to this report.

MONITORING

The regulations for Monitoring requirements specifically can be found in 10 CFR 600 §600.240 Monitoring and Reporting Program Performance.

DEVIATIONS FROM PLAN

This DOE grant has been accepted and awarded on the basis of the submitted EECS Project Activities and allocations. (Please reference DOE submission documents in Attachments). Any deviations must be approved by 1) Flint City

Council and 2) DOE prior to program changes and/or expenditures occurring. If this does not happen:

- Expenditures can be disallowed and grant repayment must occur.
- It can be cause for program and grant termination. Please reference 10 CFR 600 §600-243 Enforcement.

PART VI: SUMMARY

The city has a daunting workload ahead of them in order to recreate Flint as a Sustainable City. Success will necessitate the buy-in and assistance of every city department and every city staffer. The end result however, will be well worth the effort.

BENEFITS TO THE COF

Benefits to the city will include:

- Reduced energy usage and less general fund dollars paid for energy use
- More general fund dollars (revenue) available for other city services
- New sources of revenue generated for general fund, city services and additional energy activities.
- Reduced COF Greenhouse Gas Emissions.
- Greater efficiency and efficacy in city departments and city programs.
- Job creation and improved regional economic development .
- Improved climate, services and assistance for area Business and Industry.
- Regional partnerships created and strengthened.

WHAT THE COF NEEDS TO DO NOW

A short recap of what the COF needs to do now includes the following:

- Create new, and amend old, COF Policies, Ordinances and Statutes.
- Create and manage databases for reporting and tracking.
- Implement recommended projects and activities including.
    - Recommendations that do NOT require additional funding.
    - Recommendations that can utilize funding mechanisms OTHER THAN the DOE EECBG.
    - Recommendations that WILL UTILIZE the DOE EECBG.

- Provide Energy Efficiency and Conservation training for city staffers, local business, area institutions and the general resident.
- Provide Energy Efficiency and Conservation opportunities for city staffers, local business, area institutions and the general resident.
- Coordinate and create cohesive programs for Brownfield Redevelopment, Economic Development, Community Development and Energy Efficiency and Conservation.
- Seek opportunities to implement Smart Grid activities.
- Improve COF web site functionality and content.
- Join Coalitions and Associations in order to foster Energy Efficiency, Conservation, improved purchasing, and working partnerships.
- Ensure processes, procedures and data collection in order to meet Reporting Requirements.

In summary, a Strategic Plan is only useful if the Action Steps are implemented. Regular periodic reviews of the Plan should be conducted and the Plan updated as achievements occur, and as additions become necessary due to changing conditions.

This Strategic Plan has answered the questions of:

Where are we?
Where do we want to go?
How do we get there?

Now is the time for the City of Flint to take those steps that achieve the Vision of Flint as a Sustainable City.

REFERENCES

American Recovery and Reinvestment Act of 2009. (2009) Retrieved from http://frwebgate.access.gpo.gov/cgi-bin/getdoc.cgi?dbname=111_cong_bills&docid=f:h1enr.pdf

Consumers Energy Business Solutions. (2010). Retrieved from http://www.consumersenergy.com/uploadedFiles/EE_Programs/Business/consumers-energy-business-energy-efficiency-policies-and-procedures.pdf

Consumers Energy Savings for Home and Business. (2010). Retrieved from http://www.consumersenergy.com/eeprograms/home.aspx?ID=787

Energy Independence and Security Act of 2007 (EISA). (2007) Retrieved from http://frwebgate.access.gpo.gov/cgi-bin/getdoc.cgi?dbname=110_cong_bills&docid=f:h6enr.txt.pdf

Federal Financial Assistance Regulations, GPO Access, 10 CFR 600. (2010) Retrieved from http://ecfr.gpoaccess.gov/cgi/t/text/text-idx?c=ecfr&tpl=/ecfrbrowse/Title10/10cfr600_main_02.tpl

Flint and Genesee County Comprehensive Economic Development Strategy (CEDS), March 1, 2010. AECOM. Retrieved from http://www.co.genesee.mi.us/gcmpc-plan/AECOM_Genesee_County_Final_Full_Report_3_22_2010[1].pdf

National Association of Energy Service Companies (n.d.) What is an ESCO? Retrieved from http://www.naesco.org/resources/esco.htm

National Environmental Policy Act of 1969. (1969). Retrieved from http://www.nps.gov/history/local-law/fhpl_ntlenvirnpolcy.pdf

New Jersey Department of Environmental Protection, Office of Planning and Sustainable Communities. February 2006. Green Purchasing: A Guide for Local Governments and Communities. Retrieved from www.nj.gov/dep/opsc

U.S. Department of Energy Mission, Vision, Strategic Themes. (n.d.). Retrieved January 9, 2010, from http://www.cfo.doe.gov/strategicplan/mission.htm

U.S. Department of Energy, DE-FOA-0000013 (2009) Retrieved from https://www.fedconnect.net/FedConnect/PublicPages/PublicSearch/Public_Opportunities.aspx